DRIVE SYSTEMS

iwis
antriebssysteme
wir bewegen die welt

Product range

JWIS®

Precision chain systems for drive and conveyor purposes

www.iwis.com

Welcome iwis

© Copyright iwis antriebssysteme GmbH & Co. KG, Munich, Germany 2018

The contents of this catalogue are the copyright of the publisher and may not be reproduced (even extracts) unless permission is granted. Every care has been taken to ensure the accuracy of the information contained in this catalogue but no liability can be accepted for any errors or omissions.

Printed: SD EN 02/2018, 2,000

to antriebssysteme!

The direct route to your order!

You can reach our Customer Service Team on weekdays from 8 am to 6 pm non-stop.	+49 89 76909-1600
Or send your order by fax.	+49 89 76909-1198
Our Customer Service Team will attend to your enquiries and orders immediately.	sales-muenchen @iwis.com
For further information regarding our products please visit also our company website:	www.iwis.com

Contents iwis product

Our Company

2 Welcome

4 Contents

6 iwis antriebssysteme

8 A brand which stands for highest precision

10 Highlights, applications and customer benefits

12 Our service offers

Product Range

14 **Roller Chains**

16 according to ISO 606 (British Standard)

18 according to ISO 606 (American Standard)

19 Double-pitch type

20 **Conveyor Chains**

22 with straight attachment plates

24 Excursus: Spike Chains

26 with bent attachment plates

28 Special straight attachment plates

30 Special bent attachment plates

31 with extended bearing pins

32 Multiple strand connecting links

33 with U-shaped attachments

34 **Rapid Service for Conveyor Chains**

40 **MEGAlife Maintenance-free Chains**

44 MEGAlife I – Roller Chains

45 Conveyor Chains with straight att. plates

46 Conveyor Chains with straight att. plates

47 Conveyor Chains with bent attachment plates

48 Conveyor Chains with extended pins

49 MEGAlife II – Roller Chains

50 Special chain designs

51 Accumulation Chains

54 **CF Stainless Steel Chains**

range

Product Range

62 *dry* maintenance-free Stainless Steel Chains

66 CR Chains: corrosion-resistant chains

70 Accumulation Chains

72 Product range

74 MEGAlife Accumulation Chains

76 with offset transport rollers

78 Standard Accumulation Chains

80 *smart* Accumulation Chains

80 with finger and small parts protection

81 Side Bow Accumulation Chains

82 Important information

83 Accessories

84 Special Conveyor Chains

86 Grip Chains

91 Tube Conveyor Chains

92 Pin Oven Chains

94 Push Pull Chains

96 Plate Chains

98 Transfer Chains

101 Hollow Pin Chains

102 Pallet Transporting Chains

102 Side Bow Chains

103 Leaf Chains

Drive Line Products

104 CM Chain Condition Monitoring

108 Sprockets and Plate Wheels

112 Tools

124 Automatic Tensioners

Chain Guide

138 Perfect Lubrication

139 Efficient Chain Maintenance

140 Lubricants

143 Relubricants

144 Chain Engineering

145 Chain Guidelines

iwis

Joh. Winklhofer Beteiligungs GmbH & Co. KG

Company Headquarters, Parent of the independent subsidiary companies,
Management Organisation of the Internationally operating companies

iwis motorsysteme GmbH & Co. KG

Subsidiary for the automotive sector, for example chain drives and mass balance drives as well as oil pump drives and gear box chains

Munich (DE)
Landsberg (DE)
Indianapolis (US)
Murray (US)
PingHu (CN)
Pune (IN)
São Paulo (BR)
Seoul (KR)
Shanghai (CN)
Tokio (JP)

iwis antriebssysteme GmbH & Co. KG

Subsidiary for the industrial sector, high precision chains and drive systems for a wide range of applications

Munich (DE)
Indianapolis (US)
Istanbul (TR)
Johannesburg (ZA)
Lajeado (BR)
Meyzieu (FR)
Othmarsingen (CH)
Pune (IN)
Strakonice (CZ)
Surrey (CA)
Suzhou (CN)
Tipton (UK)

iwis antriebssysteme GmbH

A distribution and service company within the chain drive industry

Wilnsdorf (DE)
Indianapolis (US)
Istanbul (TR)
Johannesburg (ZA)
Lajeado (BR)
Meyzieu (FR)
Othmarsingen (CH)
Surrey (CA)
Suzhou (CN)
Tipton (UK)

iwis agrisystems (Div.)

Competence centre for the iwis agricultural chain program for combines and maize harvesting

Sontra (DE)
Indianapolis (US)
Istanbul (TR)
Johannesburg (ZA)
Lajeado (BR)
Meyzieu (FR)
Othmarsingen (CH)
Suzhou (CN)
Surrey (CA)
Tipton (UK)

The journey of those striding ahead

A company which has developed over **100 years** has a story. The entrepreneurial family Winklhofer has been managing the fate of the company iwis since decades and has developed it into a group of companies which committed itself to tradition, precision and innovation. This group of companies produces high precision roller chains and systems for the automotive industry, the machine and plant manufacture, the packaging, printing and food industries, the agriculture and for industrial applications in the field of conveyor technology. More than 1300 employees at the production sites of Munich, Landsberg am Lech, Wilnsdorf, Sontra and Strakonice (CZ) have committed themselves to a quality standard on the highest level.

Our consequent customer orientation in all areas lead to a close cooperation with our customers and suppliers as well as to joint technical developments – as our goal is to always offer our customers a solution at the highest quality and sustainability level. Research and development play a major role in our company's philosophy:
The detection of new trends and the development of new materials and production technologies require an innovative power and motivation of which we are proud of and which explain our top position in the market. Thus iwis antriebssysteme GmbH & Co. KG is a worldwide driving force in the general machine manufacture and delivers precision chain systems which move all around the world.

A brand which stands for highest precision.

Technical perfection of highest quality for a maximum customer benefit – that is our high standard. 100% exact replication of more than 30 million spare parts every single day – a quality benchmark which a single expression stands for at iwis: Highest precision. We are proud of that fact and numerous certifications and awards in the quality sector shows us that we follow the right path!

GERMANY

Precision for your success

Technical perfection

- Use of high quality quenched, tempered and case-hardened steels
- High precision fabrication via SPC (statistical process control)
- Quality assurance complying with ISO 9001
- Optimisation of quality features via special heat treatment
- Constant monitoring of the chains for dimensional accuracy and articulation
- Surface coatings
- Special lubricants
- Special materials (e.g corrosion-proof)

Highest possible quality

- Above average length of life
- Excellent wear resistance
- Restricted length tolerances down to 1/6 of the DIN tolerance
- Significantly higher fracture-resistance than the norm
- High fatigue strength
- iwis roller chains are pretensioned
- Extremely efficient initial lubrication

Benefits to the user

- Longer maintenance intervals
- Maintenance-friendly, easy and quick to dismantle
- Fewer down times
- Benefits of parallel and synchronous running
- Extremely precise positioning
- Extremely quiet running
- Safety reserves at load peaks
- Reduced stretching during running-in

Application fields

- Printing presses
- Paper manufacturing and processing machines
- Copiers
- Ceramics and glass industry
- Packaging machines
- Medical technology
- Textile machines
- Machine tools
- Machines for processing plastics
- General engineering and systems construction
- Woodworking machinery
- Agricultural machinery
- Office equipment
- Building materials industry
- Construction machinery
- Conveyor technology
- Chemical engineering and process technology
- Tube and can industry

Your perfect engineering partner

A scientific based company

iwis has the largest chain Research and Development department in Europe, having more than 60 development engineers soley engaged for the engineering of chain drive systems. Besides basic development and designing innovative customer solutions, the main focus of iwis Research and Development division ranges from calculations, design and testing to wear elongation and fatigue strength analysis.

- Special knowledge of noise emission analysis and vibration engineering
- Our laboratory has the capabilities to carry out many different testing possibilities including microscopy, metallography, evaluation of mechanical properties, chemical composition and qualified analysis of data
- Dynamic simulation/analysis of chain drive systems with regard to chain load, torsional vibrations and friction losses
- FEM analysis of individual chain drive parts – static and dynamic stress and strength investigations
- Evaluation of iwis and customer readings at test facilites for verification of simulation models
- Identification of thermal characterstics of chain drives while testing in the climate-testing laboratory.

Evaluation of chain breaking strength and elongation up to 1000 kN

More than 25 pulser are avaibale for testing dynamic fatigue strength according to different testing methods

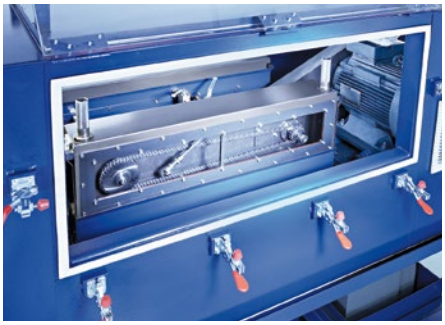

Testing of chain wear elongation behaviour on more than 20 testig rigs

Troubleshooting

Each customer problem is a challenge for us. Either you need a special conveyor chain or perhaps an own chain configuration, integrating chain wheels and guides in existing modules – as a system manufacturer our specialists offer you individual solutions, which go far beyond the chain focus on the entire application and answer your problem as a whole.

Our research and development department stands for creativity and innovation, as well as for a cooperation hand in hand with our customers. Do not hesitate to contact us in case you have a special problem.

Extreme flexibility

Offering solutions for individual customer problems as well, is our speciality and part of our company's philosophy. By conducting feasibility studies hand in hand with our customers, producing components and executing deformation and stress tests we are able to adjust existing products to individual customer requirements or to develop new chain drives. By means of vibration and stress tests of the components the physical properties of the chain are examined. We try the prototypes on test stands which expose the chain drives to extreme conditions and pressure to ensure its durability and life time. Our customers can and have to be sure that they receive a high quality product – that is our requirement.

iwis – your strong partner

The iwis group goes global. By supporting own affiliated companies in Great Britain and Switzerland as well as sites in Brazil, China, France and the USA the iwis group operates internationally. iwis products are being sold by distribution partners in more than 30 countries on all continents.

outside Germany as well

iwis has realised the chances of the globalisation at an early stage and has established a distribution structure by a targeted positioning which guarantees a worldwide supply. Thus we do not only open up new markets but our customers can appeal to a familiar and reliable local partner with regard to their business activities abroad.

You are important to us and therefore we are happy to support you in word and deed. Let our competent specialists of our technical service team and our committed external force advise you. We would like to do calculations and chain designs for you and give you advice as far as your choice of the right chain for your applications is concerned. You can reach our Customer Service Team at any time on weekdays from 8 am to 6 pm. And by the way: We are happy to service you during the operating time of the chain as a reliable partner in all matters that arise right around the iwis chain.

Our service for our customers

iwis® Roller Chains

are characterised by an above-average service life due to excellent wear resistance, high consistency, matchless precision and a considerably higher breaking strength and fatigue strength than required by ISO standard. All iwis chains are pre-stretched and are provided with a highly efficient initial lubrication.

iwis SL series chains (Super Longlife) have pins with an extremely hard surface. This special design shows outstanding characteristics: Highest wear resistance, a prolonged service life, high breaking and fatigue strength, low susceptibility to deficient operational lubrication, corrosion and frictional corrosion in the chain links.

iwis Customer Service
Tel: +49 89 76909-1600 Fax: -1198 CallBack
sales-muenchen@iwis.com

iwis® Roller Chains, British Standard

according to ISO 606 and iwis standard

ISO	iwis reference	Pitch p (")	Pitch p (mm)	Ave. tensile strength F_B (N)	Min. tensile strength F_U (N)	Bearing area f (cm^2)	Weight per m q (kg/m)	Inner link b_1 (mm) min.	Inner link b_2 (mm) max.	Inner link g (mm) max.	Outer link a_1 (mm) max. [2]	Outer link a (mm) max. [2]	Roller d_1 (mm) max.	Pin d_2 (mm) max.
Simplex														
04	G 42	6 x 2.8 mm	6.00	3,200	3,000	0.07	0.12	2.80	4.10	5.00	6.70	7.60	4.00	1.85
05 B-1	G 52	8 mm x 1/8"	8.00	6,000	4,400	0.11	0.18	3.16	4.85	7.10	8.10	9.20	5.00	2.31
–	G 53 HZ [1] [3]	8 mm x 3/16"	8.00	8,500	–	0.25	0.34	4.76	7.90	7.60	11.70	–	5.00	3.15
06 B-1	G 67 [1]	3/8 x 7/32"	9.525	10,500	8,900	0.28	0.41	5.72	8.53	8.20	12.90	14.10	6.35	3.31
–	P 83 V	1/2 x 3/16"	12.70	15,500	–	0.29	0.44	4.88	7.97	10.20	13.20	14.10	7.75	3.68
–	S 84 V	1/2 x 1/4"	12.70	18,000	–	0.38	0.58	6.40	9.65	12.00	15.00	16.00	7.75	3.97
08 B-1	L 85 SL*	1/2 x 5/16"	12.70	22,000	17,800	0.50	0.70	7.75	11.30	11.80	16.90	18.50	8.51	4.45
10 B-1	M 106 SL*	5/8 x 3/8"	15.875	27,000	22,200	0.67	0.95	9.65	13.28	14.40	19.50	20.90	10.16	5.08
12 B-1	M 127 SL*	3/4 x 7/16"	19.05	32,700	28,900	0.89	1.25	11.75	15.62	16.40	22.70	23.60	12.07	5.72
16 B-1	M 1611*	1" x 17 mm	25.40	75,000	60,000	2.10	2.70	17.02	25.45	21.10	36.10	36.90	15.88	8.28
20 B-1	M 2012	1 1/4 x 3/4"	31.75	120,000	95,000	2.92	3.72	19.56	29.01	25.40	40.50	46.30	19.05	10.19
24 B-1	M 2416	1 1/2 x 1"	38.10	211,000	160,000	5.50	7.05	25.40	37.92	33.50	53.10	60.00	25.40	14.63
28 B-1	M 2819	1 3/4 x 31 mm	44.45	250,000	200,000	7.35	8.96	30.95	46.58	37.00	63.60	69.90	27.94	15.90
32 B-1	M 3219	2" x 31 mm	50.80	315,000	250,000	8.05	10.00	30.95	45.57	42.30	65.10	70.10	29.21	17.81

[1] Straight side plates [2] Varying dimensions for cranked links [3] Bush chain

* Easy break – chains with shouldered pins

The suffix **SL** indicates chains with particularly **wear-resistant pins.**

It should be noted that if cranked links are fitted, the breaking strength of the chain may be reduced by approximately 20 %.

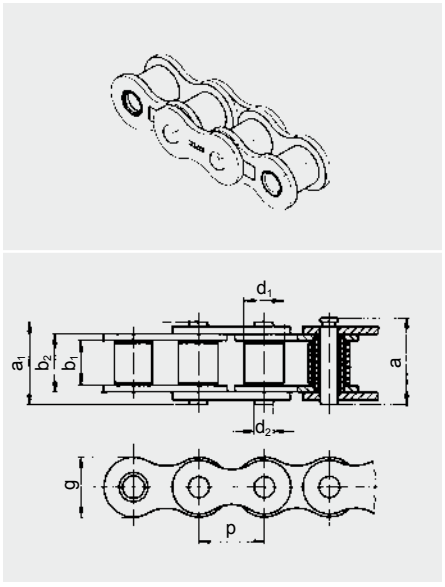

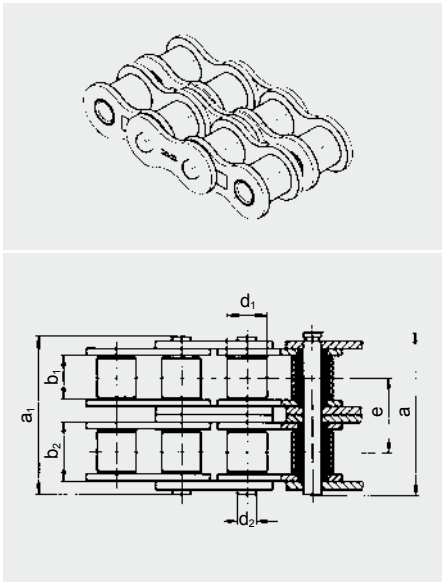

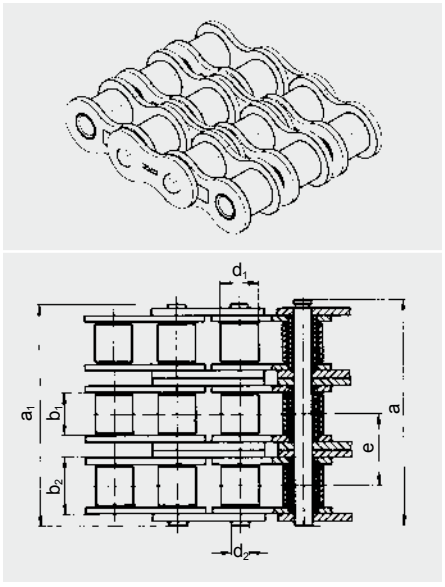

iwis® Roller Chains, British Standard

according to ISO 606 and iwis standard

ISO	iwis reference	Pitch p (")	Pitch p (mm)	Ave. tensile strength F_B (N)	Min. tensile strength F_U (N)	Bearing area f (cm²)	Weight per m q (kg/m)	Inner link b_1 (mm) min.	Inner link b_2 (mm) max.	Inner link g (mm) max.	Outer link a_1 (mm) max. [2]	Outer link a (mm) max. [2]	Roller d_1 (mm) max.	Pin d_2 (mm) max.	Transverse pitch e (mm)
Duplex															
05 B-2	D 52	8 mm x 1/8"	8.00	9,100	7,800	0.22	0.36	3.16	4.85	7.10	13.90	15.00	5.00	2.31	5.64
06 B-2	D 67 [1]*	3/8 x 7/32"	9.525	20,000	16,900	0.56	0.78	5.72	8.53	8.20	23.40	24.60	6.35	3.31	10.24
08 B-2	D 85 SL*	1/2 x 5/16"	12.70	40,000	31,100	1.00	1.35	7.75	11.30	11.80	30.80	32.40	8.51	4.45	13.92
10 B-2	D 106 SL*	5/8 x 3/8"	15.875	56,000	44,500	1.34	1.85	9.65	13.28	14.40	36.00	37.50	10.16	5.08	16.59
12 B-2	D 127*	3/4 x 7/16"	19.05	68,000	57,800	1.78	2.50	11.75	15.62	16.40	42.10	43.00	12.07	5.72	19.46
16 B-2	D 1611*	1" x 17 mm	25.40	150,000	106,000	4.21	5.40	17.02	25.45	21.10	68.00	68.80	15.88	8.28	31.88
20 B-2	D 2012	1 1/4 x 3/4"	31.75	210,000	170,000	5.84	7.36	19.56	29.01	25.40	79.70	82.90	19.05	10.19	36.45
24 B-2	D 2416	1 1/2 x 1"	38.10	370,000	280,000	11.00	13.85	25.40	37.92	33.50	101.80	106.50	25.40	14.63	48.36
28 B-2	D 2819	1 3/4" x 31 mm	44.45	500,000	360,000	14.70	18.80	30.95	46.58	37.00	124.70	129.20	27.94	15.90	59.56
32 B-2	D 3219	2" x 31 mm	50.80	530,000	450,000	16.10	19.80	30.95	45.57	42.30	126.00	128.30	29.21	17.81	58.55
Triplex															
08 B-3	TR 85*	1/2 x 5/16"	12.70	58,000	44,500	1.50	2.00	7.75	11.30	11.80	44.70	46.30	8.51	4.45	13.92
10 B-3	TR 106*	5/8 x 3/8"	15.875	80,000	66,700	2.02	2.80	9.65	13.28	14.40	52.50	54.00	10.16	5.08	16.59
12 B-3	TR 127*	3/4 x 7/16"	19.05	100,000	86,700	2.68	3.80	11.75	15.62	16.40	61.50	62.50	12.07	5.72	19.46
16 B-3	TR 1611*	1" x 17 mm	25.40	220,000	160,000	6.32	8.00	17.02	25.45	21.10	99.20	100.70	15.88	8.28	31.88
20 B-3	TR 2012	1 1/4 x 3/4"	31.75	315,000	250,000	8.76	11.00	19.56	29.01	25.40	116.10	119.40	19.05	10.19	36.45
24 B-3	TR 2416	1 1/2 x 1"	38.10	560,000	425,000	16.50	20.31	25.40	37.92	33.50	150.20	155.40	25.40	14.63	48.36
28 B-3	TR 2819	1 3/4" x 31 mm	44.45	750,000	530,000	22.05	28.00	30.95	46.58	37.00	184.60	188.90	27.94	15.90	59.56
32 B-3	TR 3219	2" x 31 mm	50.80	795,000	670,000	24.15	29.60	30.95	45.57	42.30	184.50	186.50	29.21	17.81	58.55

[1] Straight side plates [2] Varying dimensions for cranked links

* Easy break – chains with shouldered pins

The suffix **SL** indicates chains with particularly **wear-resistant pins.**

It should be noted that if cranked links are fitted, the breaking strength of the chain may be reduced by approximately 20 %.

CHAIN COMPONENTS AND CONNECTING LINKS

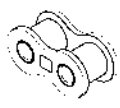

Inner link
Standard designation B

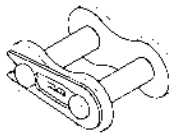

Connecting link
with spring clip
Standard designation E

Connecting link
with split pin fastening
Standard designation S

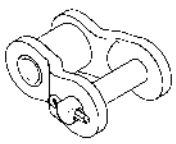

Single cranked link
with split pin fastening
Standard designation L

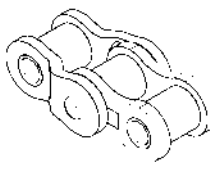

Double cranked link
Standard designation C

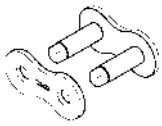

Outer link
Standard designation A

iwis Customer Service
Tel: +49 89 76909-1600 Fax: -1198 CallBack
sales-muenchen@iwis.com

iwis® Roller Chains, American Standard (ANSI)

according to ISO 606

ISO	iwis reference	ANSI Ref. no.	Pitch p (")	Pitch p (mm)	Ave. tensile strength F_B (N)	Min. tensile strength F_U (N)	Bearing area f (cm²)	Weight per m q (kg/m)	Inner link b_1 (mm) min.	Inner link b_2 (mm) max.	Inner link g (mm) max.	Outer link a_1 (mm) max. [2]	Outer link a (mm) max. [2]	Roller d_1 (mm) max.	Pin d_2 (mm) max.	Transverse pitch e (mm)
Simplex																
04 C-1	G 42 A	25-1	1/4	6.35	4,909	3,500	0.11	0.13	3.18	4.80	5.80	7.820	8.62	3.30	2.31	–
06 A-1	G 67 A	35-1	3/8	9.55	10,983	7,900	0.27	0.32	4.78	7.46	9.04	11.96	12.93	5.08	3.60	–
08 A-1	L 85 A	40-1	1/2	12.70	18,000	13,900	0.44	0.60	7.92	11.17	12.06	16.60	18.54	7.95	3.98	–
10 A-1	M 106 A	50-1	5/8	15.875	29,000	21,800	0.70	1.01	9.53	13.84	15.08	20.40	22.55	10.16	5.09	–
12 A-1	M 128 A SL [1]	60-1	3/4	19.05	42,000	31,300	1.06	1.47	12.70	17.75	18.09	25.44	27.99	11.91	5.96	–
16 A-1	M 1610 A	80-1	1	25.40	68,000	55,600	1.79	2.57	15.88	22.60	24.13	33.0	35.0	15.88	7.94	–
20 A-1	M 2012 A	100-1	1 1/4	31.75	112,776	87,000	2.62	3.95	19.05	27.45	30.16	39.68	43.98	19.05	9.54	–
24 A-1	M 2416 A	120-1	1 1/2	38.10	152,984	125,000	3.94	5.64	25.40	35.45	36.19	51.06	55.36	22.23	11.11	–
28 A-1	M 2816 A	140-1	1 3/4	44.45	205,940	170,000	4.73	7.38	25.40	37.18	42.22	54.54	59.44	25.40	12.71	–
32 A-1	M 3219 A	160-1	2	50.80	256,934	223,000	6.46	9.40	31.55	45.21	48.26	65.52	69.82	25.58	14.29	–
36 A-1	M 3623 A	180-1	2 1/4	57.15	374,614	281,000	8.88	12.67	35.71	50.85	54.29	73.28	78.78	35.71	17.46	–
40 A-1	M 4024 A	200-1	2 1/2	63.50	485,429	347,000	10.89	15.90	38.10	54.88	60.32	80.70	86.70	39.68	19.85	–
48 A-1	M 4830 A	240-1	3	76.20	686,466	500,000	16.15	24.40	47.63	67.81	72.39	98.70	104.70	47.63	23.81	–
Duplex																
04 C-2	D 42 A	25-2	1/4	6.35	9,218	7,000	0.22	0.25	3.18	4.80	5.80	14.22	15.02	3.30	2.31	6.40
06 A-2	D 67 A	35-2	3/8	9.53	21,967	15,800	0.56	0.63	4.78	7.46	9.04	22.42	23.12	5.08	3.60	10.13
08 A-2	D 85 A	40-2	1/2	12.70	36,000	27,800	0.88	1.22	7.92	11.17	12.06	31.00	32.98	7.95	3.98	14.38
10 A-2	D 106 A	50-2	5/8	15.875	56,000	43,600	1.40	2.00	9.53	13.84	15.08	38.60	40.72	10.16	5.09	18.11
12 A-2	D 128 A [1]	60-2	3/4	19.05	84,000	62,600	2.12	2.90	12.70	17.75	18.09	48.20	50.83	11.91	5.96	22.78
16 A-2	D 1610 A	80-2	1	25.40	145,000	111,200	3.58	5.05	15.88	22.60	24.13	62.20	64.30	15.88	7.92	29.29
20 A-2	D 2012 A	100-2	1 1/4	31.75	225,553	174,000	5.24	7.86	19.05	27.45	30.16	76.28	79.18	19.05	9.54	35.76
24 A-2	D 2416 A	120-2	1 1/2	38.10	305,967	250,000	7.88	11.20	25.40	35.45	36.19	96.26	100.46	22.23	11.11	45.44
28 A-2	D 2816 A	140-2	1 3/4	44.45	411,879	340,000	9.46	14.66	25.40	37.18	42.22	103.14	108.54	25.40	12.71	48.87
32 A-2	D 3219 A	160-2	2	50.80	249,089	446,000	12.92	18.64	31.55	45.21	48.26	124.82	127.62	25.58	14.29	58.55
36 A-2	D 3623 A	180-2	2 1/4	57.15	749,228	562,000	17.76	25.14	35.71	50.85	54.29	139.12	144.62	35.71	17.46	65.84
40 A-2	D 4024 A	200-2	2 1/2	63.50	970,858	694,000	21.78	31.60	38.10	54.88	60.32	152.30	158.30	39.68	19.85	71.55
48 A-2	D 4830 A	240-2	3	76.20	1,372,931	1,000,000	32.30	48.40	47.63	67.81	72.39	186.60	192.50	47.63	23.81	87.83
Triplex																
04 C-3	TR 42 A	25-3	1/4	6.35	13,827	10,500	0.33	0.37	3.18	4.80	5.80	21.06	21.86	3.30	2.31	6.40
06 A-3	TR 67 A	35-3	3/8	9.53	32,950	23,700	0.81	0.94	4.78	7.46	9.04	32.18	33.28	5.08	3.60	10.13
08 A-3	TR 85 A	40-3	1/2	12.70	50,000	41,700	1.32	1.82	7.92	11.17	12.06	45.40	47.36	7.95	3.98	14.38
10 A-3	TR 106 A	50-3	5/8	15.875	80,000	65,400	2.10	2.89	9.53	13.84	15.08	56.70	58.93	10.16	5.09	18.11
12 A-3	TR 128 A	60-3	3/4	19.05	125,000	93,900	3.18	4.28	12.70	17.75	18.09	71.10	73.71	11.91	5.96	22.78
16 A-3	TR 1610 A	80-3	1	25.40	210,000	166,800	5.37	7.54	15.88	22.60	24.13	91.40	93.50	15.88	7.94	29.29
20 A-3	TR 2012 A	100-3	1 1/4	31.75	338,329	261,000	7.86	11.75	19.05	27.45	30.16	112.98	115.88	19.05	9.54	35.76
24 A-3	TR 2416 A	120-3	1 1/2	38.10	458,951	375,000	11.82	16.73	25.40	35.45	36.19	140.86	145.96	22.23	11.11	45.44
28 A-3	TR 2816 A	140-3	1 3/4	44.45	617,819	510,000	14.19	21.93	25.40	37.18	42.22	152.24	157.24	25.40	12.71	48.87
32 A-3	TR 3219 A	160-3	2	50.80	770,803	669,000	19.38	27.89	31.55	45.21	48.26	183.52	185.52	25.58	14.29	58.55
36 A-3	TR 3623 A	180-3	2 1/4	57.15	1,123,842	843,000	26.64	37.60	35.71	50.85	54.29	210.45	210.46	35.71	17.46	65.84
40 A-3	TR 4024 A	200-3	2 1/2	63.50	1,456,288	1,041,000	32.67	47.30	38.10	54.88	60.32	223.80	229.80	39.68	19.85	71.55
48 A-3	TR 4830 A	240-3	3	76.20	2,059,397	1,500,000	48.45	72.40	47.63	67.81	72.39	274.40	280.40	47.63	23.81	87.83

[1] Also available with straight side plates [2] Varying dimensions for cranked links

iwis Customer Service
CallBack Tel: +49 89 76909-1600 Fax: -1198
sales-muenchen@iwis.com

iwis antriebssysteme
wir bewegen die welt

iwis® Roller Chains, double-pitch type
according to ISO 1275

ISO	iwis reference	ANSI Ref. no.	Pitch p (")	Pitch p (mm)	Ave. tensile strength F_B (N)	Min. tensile strength F_U (N)	Bearing area f (cm²)	Weight per m q (kg/m)	Inner link: b_1 (mm) min.	Inner link: b_2 (mm) max.	Inner link: g (mm) max.	Outer link: a_1 (mm) max. 2)	Outer link: a (mm) max. 2)	Roller d_1 (mm) max.	Pin d_2 (mm) max.	Transverse pitch e (mm)
Roller Chains, double-pitch type																
208 B	LR 165 SL	–	1	25.40	22,000	18,000	0.50	0.52	7.75	11.30	11.80	16.90	18.60	8.51	4.45	–
210 B	LR 206 SL	–	1 1/4	31.75	28,000	22,400	0.67	0.63	9.65	13.28	15.10	19.50	20.80	10.16	5.08	–
212 B	LR 247 SL	–	1 1/2	38.10	34,000	29,000	0.89	0.85	11.75	15.62	16.10	22.70	24.10	12.07	5.72	–
216 B	LR 3211	–	2	50.80	75,000	60,000	2.10	1.77	17.02	25.45	20.60	36.10	38.10	15.88	8.28	–

1) Also available with straight side plates
2) Varying dimensions for cranked links

* Roller chains with "easy break" shouldered pins – chains are easy to dismantle

It should be noted that if cranked links are fitted, the breaking strength of the chain may be reduced by approximately 20 %. The suffix SL indicates chains with particularly wear-resistant pins.

Roller chains, double-pitch type

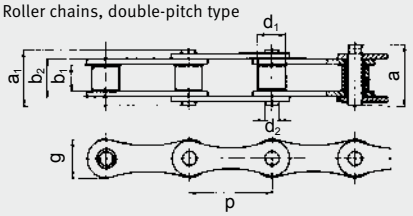

iwis® High Performance Chains
Quality products with a world reputation

HIGH QUALITY IS BASED ON EACH INDIVIDUAL PART BEING TECHNICALLY PERFECT

- Use of high-grade heat-treatable steels which are made exclusively for iwis to their material analysis, tolerance and surface quality.
- Each chain part is manufactured a million times daily to the same precision. This production is monitored by SPC (statistical process control).
- All chain parts are heat-treated, using special processes to optimize quality features.
- Constant geometry and high surface quality result from the use of modern production technologies.
- Chains are checked for dimensional accuracy: length tolerance, freedom of articulation and assembly component integrity, inspection of the press-in seating of the pin outer links and bush-inner link interfaces.
- The high standard of quality assurance conforms with the high requirements of ISO 9001.
- For special applications
  - Surface coatings
  - Special lubrications
  - Reduced length toleranced chains
  - Special materials (e.g. corrosion resistant)

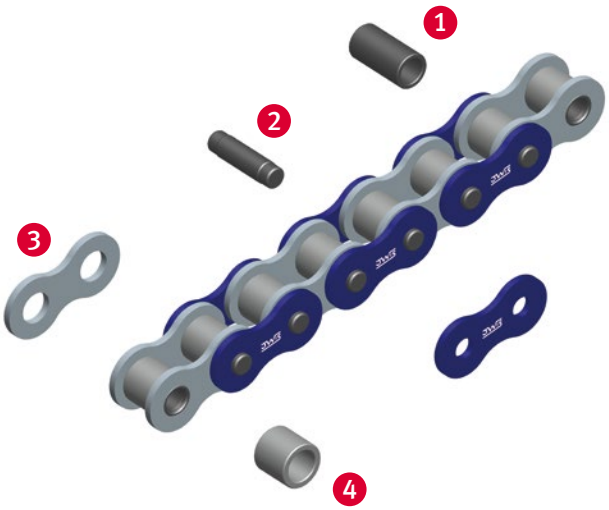

1. iwis bush – manufactured as a special, surface treated cylinder and depending on the application seamless or curled
2. iwis shouldered pin (ISO 606): SL chains have pins with even higher resistance to wear.
3. iwis side plate – optimally dimensioned, shaped with precision, and heat-treated for toughness and hardness.
4. iwis roller – an absolutely cylindrical form guarantees ideal sliding-contact bearing properties.

iwis® Conveyor Chains

iwis conveyor chains can especially be matched with the demands of customer applications. iwis does not only supply the customer with a wide range of special straight attachments and bent attachment plates, but the Technical Service Team offers solutions for individual customer demands and designs custom-made products.

iwis conveyor chains offer the user the benefits of parallel and synchronous running, extremely precise positioning, quiet running and a significantly higher breaking resistance than the norm. Also available: conveyor chains with extended bearing pins, conveyor chains with U-shaped attachments and multiple strand connecting links.

iwis Customer Service
Tel: +49 89 76909-1600 Fax: -1198 CallBack
sales-muenchen@iwis.com

iwis® Conveyor Chains with straight attachment plates

based on iwis chains complying with ISO 606 and ISO 1275

ISO	iwis reference	Pitch [2] p (")	p (mm)	a (mm)	b (mm)	d (mm)	Single strand chains e_1 (mm)	Double strand chains e_2 (mm)	Triple strand chains e_3 (mm)	g (mm)	i (mm)	l (mm)	s (mm)	Threaded insert M (mm)	m. max (mm)
Plate No. 102.1															
–	P 83 V	1/2	12.7	13.0	19.0	4.2	8.1	–	–	4.5	–	18.0	1.5	–	–
–	S 84 V	1/2	12.7	13.0	19.0	4.2	9.8	–	–	4.5	–	18.0	1.5	–	–
08 B-1	L 85 SL [1]	1/2	12.7	13.0	19.0	4.2	11.6	25.5	39.4	5.4	–	18.0	1.5	4	5.2
10 B-1	M 106 SL [1]	5/8	15.875	16.3	24.3	5.2	13.6	30.1	46.6	6.8	–	24.0	1.6	5	5.3
12 B-1	M 127 SL [1]	3/4	19.05	19.1	29.1	6.2	15.9	35.3	54.7	7.4	–	28.0	1.8	5	5.5
16 B-1	M 1611 [1]	1	25.4	24.6	36.6	8.2	25.9	57.8	89.7	10.4	–	36.2	3.0	6	8.2
08 A-1 ANSI 40	L 85 A [1]	1/2	12.7	13.0	19.0	4.2	11.4	25.8	40.2	4.5	–	18.0	1.5	–	–
10 A-1 ANSI 50	M 106 A [1]	5/8	15.875	16.3	24.3	5.2	14.1	32.3	50.4	6.8	–	24.0	1.6	–	–
12 A-1 ANSI 60	M 128 A SL [1]	3/4	19.05	19.1	29.1	6.2	18.1	40.8	63.6	7.4	–	28.0	2.4	–	–
16 A-1 ANSI 80	M 1610 A [1]	1	25.4	24.6	36.6	8.2	23.0	52.2	81.5	10.4	–	36.2	3.0	–	–
Plate No. 103.1 and 103.2															
–	P 83 V [2]	1/2	12.7	17.0	23.0	4.2	8.1	–	–	4.5	12.7	23.6	1.5	–	–
–	S 84 V	1/2	12.7	17.0	23.0	4.2	9.8	–	–	4.5	12.7	23.6	1.5	–	–
08 B-1	L 85 SL [1]	1/2	12.7	17.0	23.0	4.2	11.6	25.5	39.4	5.4	12.7	23.6	1.5	4	5.2
10 B-1	M 106 SL [1]	5/8	15.875	16.3	25.8	5.2	13.6	30.1	46.6	7.5	15.8	31.0	1.6	5	5.3
12 B-1	M 127 SL [1]	3/4	19.05	18.3	29.0	6.2	15.9	35.3	54.7	9.0	19.0	37.2	1.8	5	5.5
16 B-1	M 1611 [1]	1	25.4	28.45	41.55	8.2	25.9	57.8	89.7	10.35	25.4	47.2	3.0	6	8.2
08 A-1 ANSI 40	L 85 A [1]	1/2	12.7	17.0	23.0	4.2	11.4	25.8	40.2	4.5	12.7	23.6	1.5	–	–
10 A-1 ANSI 50	M 106 A [1]	5/8	15.875	16.3	25.8	5.2	14.1	32.3	50.4	7.5	15.8	31.0	1.6	–	–
12 A-1 ANSI 60	M 128 A SL [1]	3/4	19.05	18.3	29.0	6.2	18.1	40.8	63.6	9.0	19.0	37.2	2.4	–	–
16 A-1 ANSI 80	M 1610 A [1]	1	25.4	28.45	41.55	8.2	23.0	52.2	81.5	10.35	25.4	47.2	3.0	–	–
Plate No. 101.1 and 101.2															
208 B	LR 165 SL	1	25.4	14.3	20.5	4.2	11.6	–	–	6.5	14.0	24.2	1.5	–	–
210 B	LR 206 SL	1 1/4	31.75	16.3	25.8	5.2	13.8	–	–	7.5	18.0	30.2	1.6	–	–
212 B	LR 247 SL	1 1/2	38.1	19.2	29.5	6.2	15.9	–	–	9.0	20.0	36.2	1.7	–	–
216 B	LR 3211	2	50.8	28.5	40.6	8.2	25.9	–	–	10.2	28.0	48.2	3.0	–	–

[1] Available for both double and triple strand chains [2] Nominal pitch

iwis Customer Service
CallBack Tel: +49 89 76909-1600 Fax: -1198
sales-muenchen@iwis.com

iwis® Conveyor Chains with straight attachment plates

based on iwis chains complying with ISO 606 and ISO 1275

STRAIGHT ATTACHMENT PLATES

The designs shown below can be supplied as connecting links, or outer links for end fitting or repair. Further threaded inserts can also be supplied. Details on request.

Single

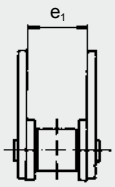

Double

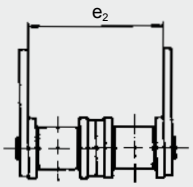

Triple

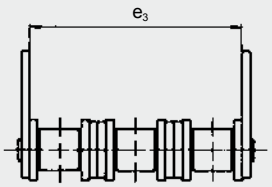

Design 102.1

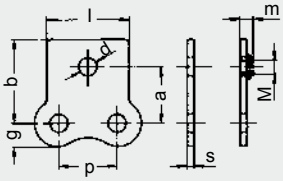

102.31 with threaded insert

Design 103.1

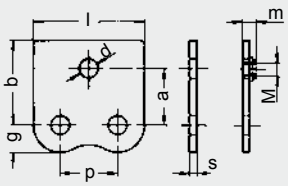

Design 103.2

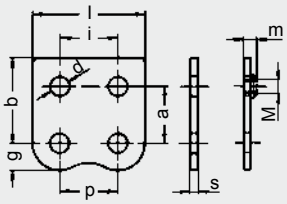

103.32 with threaded insert

Design 101.1 for double-pitch chains

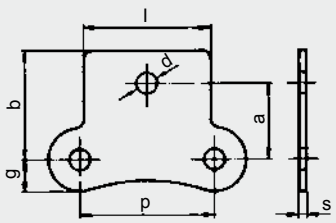

Design 101.2 for double-pitch chains

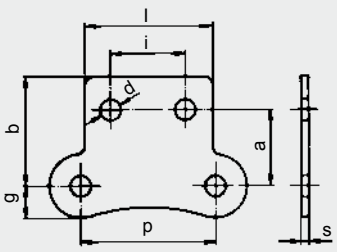

iwis Customer Service
Tel: +49 89 76909-1600 Fax: -1198 CallBack
sales-muenchen@iwis.com

iwis® Spike Chains
for the thermoform industry

EXCURSUS

PRECISE PRODUCT SOLUTIONS

Our conveyor chains are developed to suit customer specific requirements and applications. They can be manufactured using standard components or specially developed products. With this in mind we present our uniquely developed Thermoform chains which are used throughout the world, offering **precision, quality** and a distinctive **longer lifetime** in all thermoformed packaging applications.

CUSTOMIZED CONVEYOR CHAINS

iwis conveyor chains can be customized to meet the **specific requirements** of your application. iwis not only offers a wide range of **special straight and bent attachment plates**, we can also help customers develop their own special designs.

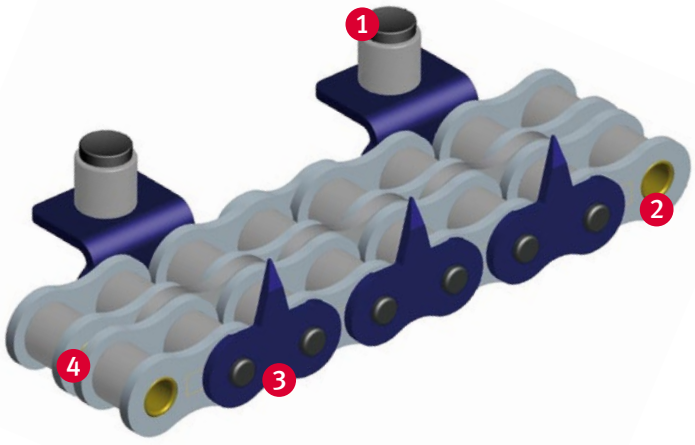

HIGHLIGHTS

1. Specially designed **guide rollers** and wear resistant extruded **pins** offer precise film alignment.
2. SL (super longlife) heat-treated, **easy break pins** increase wearlife and precision of operation.
3. Uniquely designed and specially hardened **spike profiles** offer the best solution for handling your Thermoform material and optimises the lifetime of the chain.
4. Specially designed **intermediate plates** reduce lateral forces within the chain, thus reducing elongation while extending wear life.

iwis Customer Service
CallBack Tel: +49 89 76909-1600 Fax: -1198
sales-muenchen@iwis.com

ISO	iwis reference	Pitch p (")	Pitch p (mm)	Ave. tensile strength F_B (N)	Min. tensile strength F_U (N)	Bearing area f (cm²)	Weight/m q (kg/m)	Inner link b_1 (mm) min.	Inner link b_2 (mm) max.	Inner link g (mm) max.	Outer link a_1 (mm) max.	Outer link a (mm) max.	Roller d_1 (mm) max.	Pin d_2 (mm) max.	Transverse pitch e (mm)
Available Standard Roller Chains															
08 B-1	L 85 SL	1/2 x 5/16	12.7	22.000	17.800	0.5	0.7	7.75	11.3	11.8	16.9	18.5	8.51	4.45	–
08 B-2	D 85 SL	1/2	12.7	40.000	31.100	1	1.4	7.75	11.3	11.8	30.8	32.4	8.51	4.45	13.92

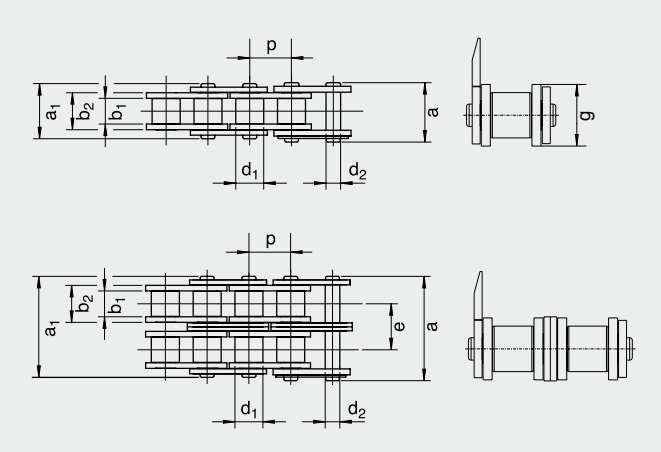

EXAMPLES OF AVAILABLE SPECIAL IWIS STRAIGHT ATTACHMENTS PLATES

Design 112.0

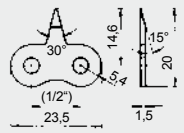

FL85SL with 112.0:
Art. 50002138

FD85SL with 112.0:
Art. 50018836

Design 112.06

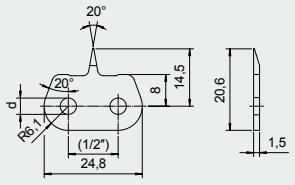

FD85SL with 112.06:
Art. 50019757

Design 112.09

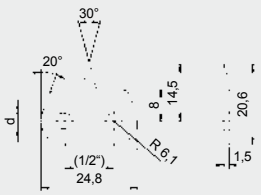

FD85SL with 112.09:
Art. 50028230

Design 112.10

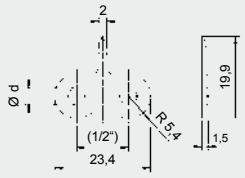

Various designs available.

FURTHER PRODUCT BENEFITS

- Special lubrications available
- Reduced length tolerances
- Special chain solutions on request (e.g. with or without guide rollers)
- Also MEGAlife maintenance-free, ANSI and side bow versions available

iwis Customer Service
Tel: +49 89 76909-1600 Fax: -1198 CallBack
sales-muenchen@iwis.com

iwis® Conveyor Chains with bent attachment plates

based on iwis chains complying with ISO 606 and ISO 1275

ISO	iwis reference	Pitch p (")	Pitch p (mm)	c (mm)	d (mm)	Simplex e_1 (mm)	Simplex f_1 (mm)	Duplex e_2 (mm)	Duplex f_2 (mm)	Triplex e_3 (mm)	Triplex f_3 (mm)	g (mm)	h (mm)	i (mm)	l (mm)	s (mm)	Threaded insert M (mm)	Threaded insert m max. (mm)
Design 202.1																		
–	P 83 V	1/2	12.7	8.0	4.2	24.1	36.1	–	–	–	–	4.5	14.0	–	18.1	1.5	–	–
–	S 84 V	1/2	12.7	8.0	4.2	25.8	37.8	–	–	–	–	4.5	14.0	–	18.1	1.5	–	–
08 B-1	L 85 SL [1]	1/2	12.7	8.0	4.2	27.6	39.6	41.5	53.5	55.4	67.4	5.4	14.0	–	18.1	1.5	4	5.2
10 B-1	M 106 SL [1]	5/8	15.875	9.0	5.2	33.6	49.6	50.1	66.1	66.6	82.6	6.8	18.0	–	24.0	1.6	5	5.3
12 B-1	M 127 SL [1]	3/4	19.05	10.0	6.2	41.1	61.1	60.5	80.5	79.9	99.9	7.4	22.6	–	28.0	1.8	5	5.5
16 B-1	M 1611 [1] [2]	1	25.4	16.0	8.2	53.9	77.9	85.8	109.8	117.7	141.7	10.4	26.0	–	36.2	3.0	6	8.2
08 A-1 ANSI 40	L 85 A [1]	1/2	12.7	8.0	4.2	27.4	39.4	41.8	53.8	56.2	68.2	4.5	14.0	–	18.1	1.5	–	–
10 A-1 ANSI 50	M 106 A [1]	5/8	15.875	9.0	5.2	34.1	50.1	52.3	68.3	70.4	86.4	6.8	18.0	–	24.0	1.6	–	–
12 A-1 ANSI 60	M 128 A SL [1]	3/4	19.05	13.0	6.2	38.9	58.9	61.6	81.6	84.4	104.4	7.4	20.4	–	28.0	2.4	–	–
16 A-1 ANSI 80	M 1610 A [1] [2]	1	25.4	16.0	8.2	51.0	75.0	80.2	104.2	109.5	133.5	10.4	26.0	–	36.2	3.0	–	–
Design 203.1 and 203.2																		
–	P 83 V [2]	1/2	12.7	9.5	4.2	29.1	41.1	–	–	–	–	4.5	16.5	12.7	23.6	1.5	–	–
–	S 84 V [2]	1/2	12.7	9.5	4.2	30.8	42.8	–	–	–	–	4.5	16.5	12.7	23.6	1.5	–	–
08 B-1	L 85 SL [1] [2]	1/2	12.7	9.5	4.2	32.6	44.6	46.5	58.5	60.4	72.4	5.4	16.5	12.7	23.6	1.5	4	5.2
10 B-1	M 106 SL [1] [2]	5/8	15.875	11.0	5.2	30.6	49.6	47.1	66.1	63.6	82.6	7.5	18.0	15.8	31.0	1.6	5	5.3
12 B-1	M 127 SL [1] [2]	3/4	19.05	12.0	6.2	35.5	56.9	54.9	76.3	74.3	95.7	9.0	20.5	19.0	37.2	1.8	5	5.5
16 B-1	M 1611 [1] [2]	1	25.4	18.0	8.2	57.7	83.9	89.6	115.8	121.5	147.8	10.4	29.0	25.4	47.2	3.0	6	8.2
08 A-1 ANSI 40	L 85 A [1] [2]	1/2	12.7	9.5	4.2	32.4	44.4	46.8	58.8	61.2	73.2	4.5	16.5	12.7	23.6	1.5	–	–
10 A-1 ANSI 50	M 106 A [1] [2]	5/8	15.875	11.0	5.2	31.1	50.1	49.3	68.3	67.3	86.4	7.5	18.0	15.8	31.0	1.6	–	–
12 A-1 ANSI 60	M 128 A SL [1] [2]	3/4	19.05	13.0	6.2	37.3	58.7	60.0	81.4	82.8	104.2	9.0	20.3	19.0	37.2	2.4	–	–
16 A-1 ANSI 80	M 1610 A [1] [2]	1	25.4	18.0	8.2	54.8	81.0	84.0	110.2	113.3	139.5	10.4	29.0	25.4	47.2	3.0	–	–
Design 201.1 and 201.2																		
208 B	LR 165 SL [2]	1	25.4	10.0	4.2	26.2	38.6	–	–	–	–	6.5	13.5	14.0	24.2	1.5	–	–
210 B	LR 206 SL [2]	1 1/4	31.75	11.0	5.2	30.6	49.6	–	–	–	–	7.5	18.0	18.0	30.2	1.6	–	–
212 B	LR 247 SL [2]	1 1/2	38.1	13.0	6.2	34.9	55.5	–	–	–	–	9.0	19.8	20.0	36.2	1.7	–	–
216 B	LR 3211 [2]	2	50.8	18.0	8.2	57.7	81.9	–	–	–	–	10.2	28.0	28.0	48.2	3.0	–	–

[1] Available also for corresponding double and triple strand chains [2] The bent attachment plates can also be fitted facing inwards with the top part

iwis Customer Service
CallBack Tel: +49 89 76909-1600 Fax: -1198
sales-muenchen@iwis.com

iwis® Conveyor Chains with bent attachment plates

based on iwis chains complying with ISO 606 and ISO 1275

BENT ATTACHMENT PLATES

The designs shown below can be supplied as connecting links, or outer links for end fitting or repair.

When the attachment is fitted facing inwards over the chain, threaded inserts cannot be used. Further threaded inserts can also be supplied. Details on request.

Single

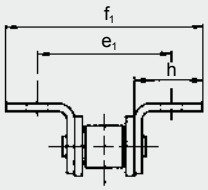

Double

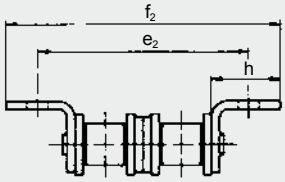

Triple

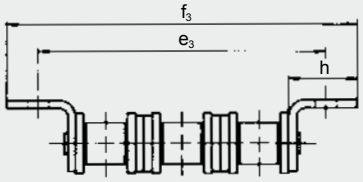

Design 202.1

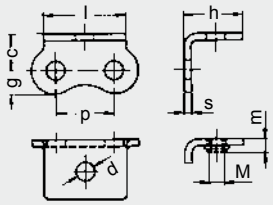

202.31 with threaded insert

Design 203.1

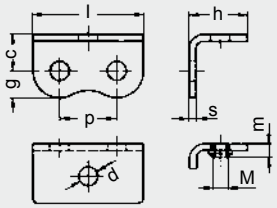

203.31 with threaded insert

Design 203.2

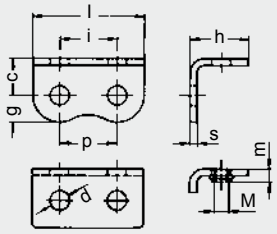

203.32 with threaded insert

Design 201.1 for double-pitch chains

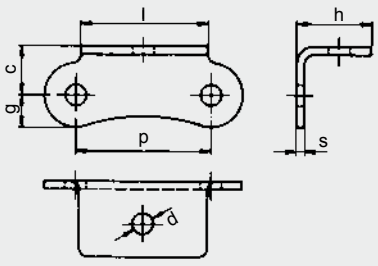

Design 201.2 for double-pitch chains

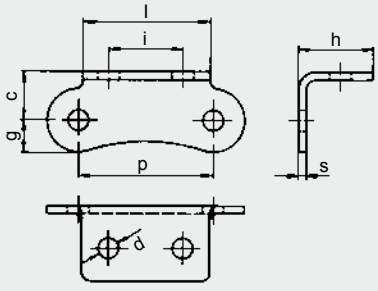

iwis Customer Service
Tel: +49 89 76909-1600 Fax: -1198 CallBack
sales-muenchen@iwis.com

iwis® Conveyor Chains

Special straight attachment plates – various examples

For chain G 52: Design 103.7

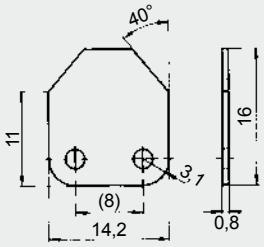

For chain G 52: Design 121.0

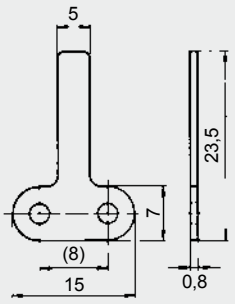

For chain L 85 SL: Design 103.62

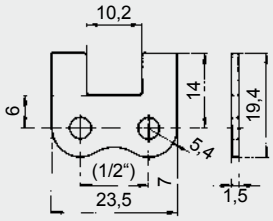

For chain L 85 SL: Design 103.63

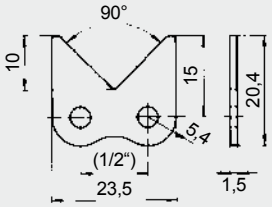

For chain L 85 SL: Design 103.65

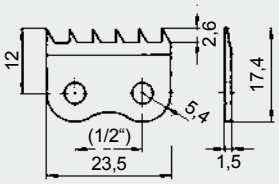

For chain L 85 SL: Design 106.0
Guide plates for inner links

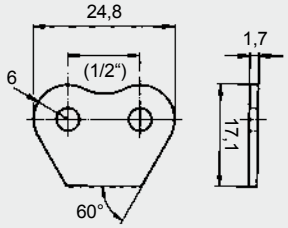

For chain L 85 SL: Design 110.0

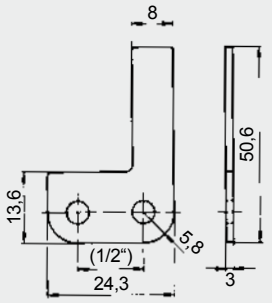

For chain L 85 SL: Design 112.0

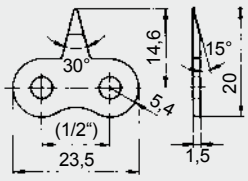

For chain L 85 SL: Design 120.11

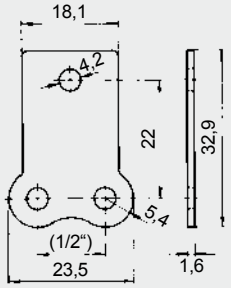

For chain L 85 SL: Trip or cam plate

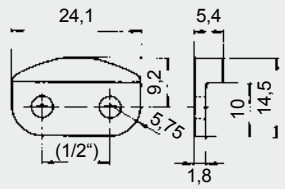

For chain M 106 SL: Design 102.71

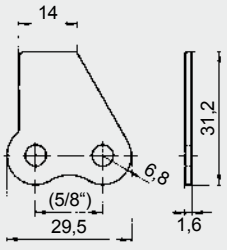

For chain M 127 SL: Design 102.61

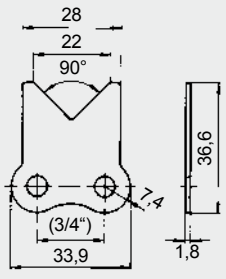

iwis Customer Service
CallBack Tel: +49 89 76909-1600 Fax: -1198
sales-muenchen@iwis.com

iwis® Conveyor Chains

Special straight attachment plates – various examples

For chain M 127 SL: Design 122.21

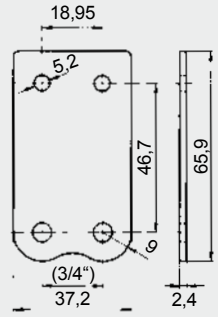

For chain M 128 A SL: Design 103.64

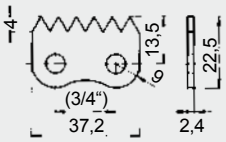

For chain M 128 A SL: Design 119.1

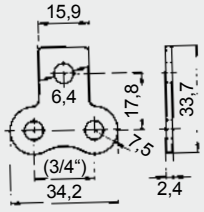

For chain M 127 SL: Design 102.65

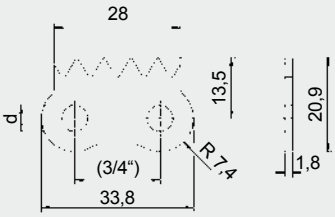

For chain L 85 SL: Design 103.52

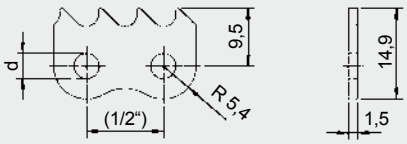

For chain M 127 A SL: Design 103.64

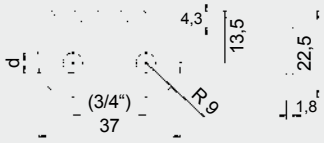

For chain M 128 A SL: Design 103.64

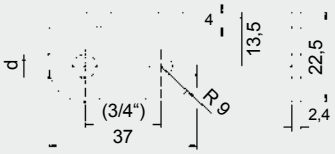

For chain L 85 SL: Design 103.67

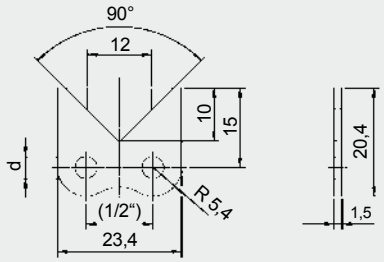

For chain L 85 SL: Design 112.10

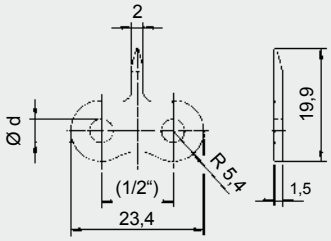

For chain L 85 SL: Design 131.12

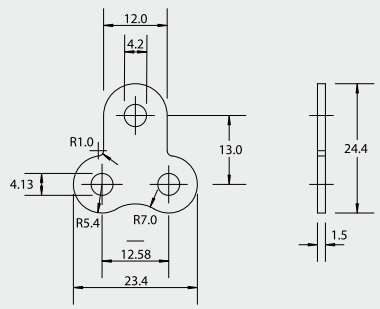

For chain L 85 SL: Design 112.09

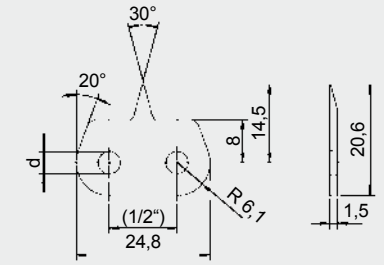

For chain L 85 SL: Design 132.0

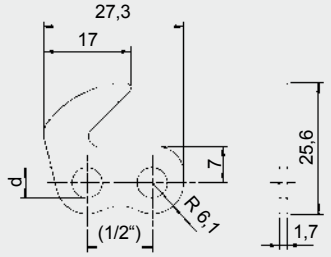

iwis Customer Service
Tel: +49 89 76909-1600 Fax: -1198 CallBack
sales-muenchen@iwis.com

iwis® Conveyor Chains

Special bent attachment plates – various examples

For chain L 85 SL: Design 203.8

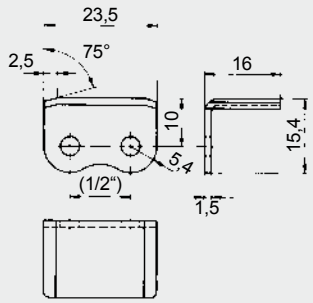

For chain L 85 SL: Design 220.11

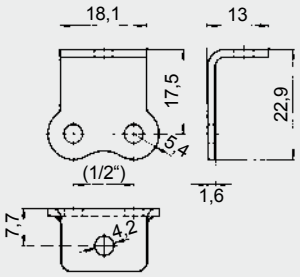

For chain M 106 SL: Design 220.13

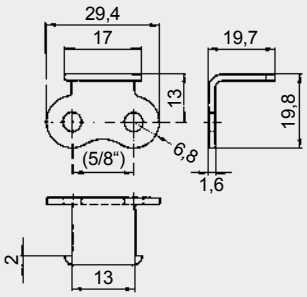

For chain M 106 SL: Design 202.6

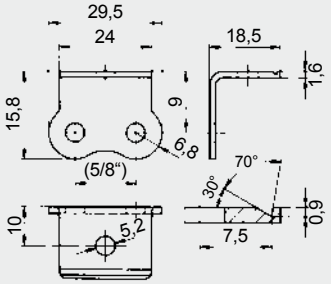

For chain M 127 SL: Design 203.8

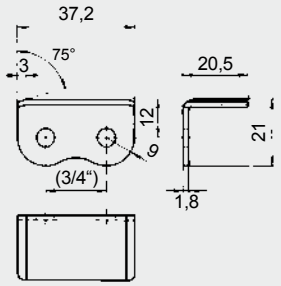

For chains M 128 A SL/M 128 A SB, Design 222.2

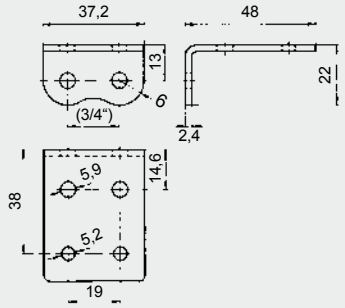

For chain M 128 A SL: Design 202.3

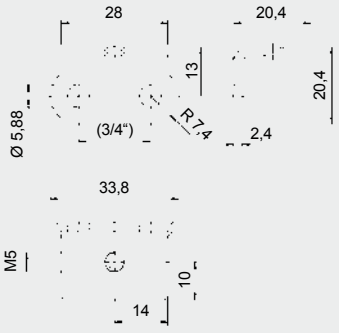

For chain M 128 A SL: Design 202.8

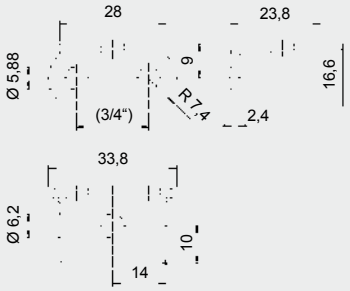

For chains M 1610 A und M 1611 SL: Design 202.13

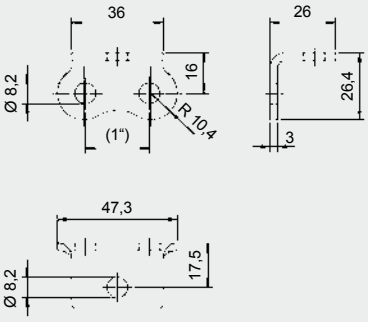

For chain M 127 SL: Design 203.12

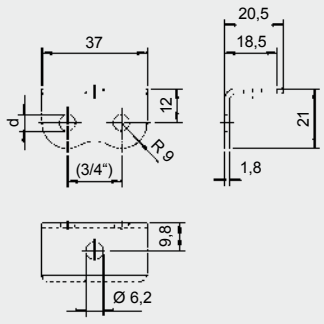

For chain P83V: Design 220.15

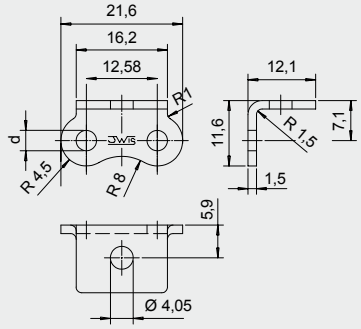

Similar attachment plate designs for other chain types are available on request, as are other attachment plate designs. For some special attachment plates minimum order quantities are required.

iwis® Conveyor Chains with extended bearing pins

based on iwis chains complying with ISO 606 and ISO 1275

ISO	iwis reference [1]	Pitch p (")	Pitch p (mm)	Innerwidth b_1 (mm)	Roller diameter d_1 (mm)	Extended bearing pin diameter d_2 (mm)	Design A pin length L_1 (mm)	Design A pin length l_1 (mm)	Design B and C pin length L_2 (mm)	Design B and C pin length l_2 (mm)	Design B and C pin length l_3 (mm)
Pin design A, B, C											
05 B-1	G 52	–	8.0	3.16	5.0	2.31	17.5	10.0	27.5	20.0	10.5
06 B-1	G 67	3/8	9.525	5.72	6.35	3.31	22.0	10.0	34.0	22.0	11.5
–	P 83 V	1/2	12.7	4.88	7.75	3.68	22.0	10.0	37.0	25.0	13.0
08 B-1	L 85 SL	1/2	12.7	7.75	8.51	4.45	25.5	10.0	40.5	25.0	13.0
10 B-1	M 106 SL	5/8	15.875	9.65	10.16	5.08	30.0	12.0	48.0	30.0	15.5
12 B-1	M 127 SL	3/4	19.05	11.75	12.07	5.72	36.0	15.0	51.0	30.0	15.5
16 B-1	M 1611	1	25.4	17.02	15.88	8.28	53.5	20.0	68.5	35.0	18.0
08 A-1 ANSI 40	L 85 A	1/2	12.7	7.94	7.95	3.96	25.5	10.0	45.3	30.0	15.5
10 A-1 ANSI 50	M 106 A	5/8	15.875	9.53	10.16	5.08	31.5	12.0	48.0	29.0	15.0
12 A-1 ANSI 60	M 128 A SL	3/4	19.05	12.70	11.91	5.96	38.0	14.0	48.0	24.0	12.5
16 A-1 ANSI 80	M 1610 A	1	25.4	15.88	15.88	7.92	49.5	19.0	61.3	31.0	16.0
208 B	LR 165 SL	1	25.4	7.75	8.51	4.45	25.5	10.0	40.5	25.0	13.0
210 B	LR 206 SL	1 1/4	31.75	9.65	10.16	5.08	30.0	12.0	48.0	30.0	15.5
212 B	LR 247 SL	1 1/2	38.1	11.75	12.07	5.72	36.0	15.0	51.0	30.0	15.5
216 B	LR 3211	2	50.8	17.02	15.88	8.28	53.5	20.0	68.5	35.0	18.0

[1] For multiple strand chains on request. Other pin designs and lengths available on request.

EXTENDED BEARING PINS

The designs shown below can be supplied as connecting links or outer links for end fitting or repair (C only as outer link).

Design A

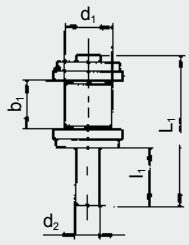

Design B

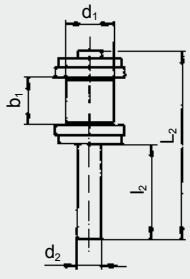

Design C

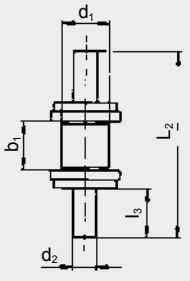

iwis Customer Service
Tel: +49 89 76909-1600 Fax: -1198 CallBack
sales-muenchen@iwis.com

iwis® Multiple strand connecting links

for fitting components [1)]

ISO	iwis reference	p (")	Pitch	Pitch of holes in component (mm)	Inner width b_1 (mm)	Roller diameter d_1 (mm)	Pin diameter d_2 (mm)	Outside width a_2 (mm)	Outside width a_3 (mm)	Block width A_2 (max. mm)	Block width A_3 (max. mm)
Duplex											
05B-1	G 52	8 mm		7.94	3.16	5.0	2.31	14.9	–	4.0	–
06B-1	G 67	3/8		9.42	5.72	6.35	3.31	24.5	34.6	7.0	17.5
Duplex / Triplex											
08B-1	L 85 SL	1/2		12.58	7.75	8.51	4.45	32.3	46.2	11.3	25.2
10B-1	M 106 SL	5/8		15.76	9.65	10.16	5.08	37.4	53.9	13.3	29.9
12B-1	M 127 SL	3/4		18.95	11.75	12.07	5.72	42.9	62.4	15.6	35.1
16B-1	M 1611	1		25.27	17.02	15.88	8.28	68.7	100.6	25.5	57.4
08 A-1 ANSI 40	L 85 A	1/2		12.58	7.94	7.95	3.96	31.8	46.2	11.2	25.5
10 A-1 ANSI 50	M 106 A	5/8		15.76	9.53	10.16	5.08	39.8	57.9	13.8	32.0
12 A-1 ANSI 60	M 128 A SL	3/4		18.95	12.70	11.91	5.96	49.4	72.2	17.8	40.6
16 A-1 ANSI 80	M 1610 A	1		25.27	15.88	15.88	7.92	63.2	92.6	22.6	51.9

[1)] Please note the exact pitch measure „p“ for the assembly of special components.

EXAMPLES

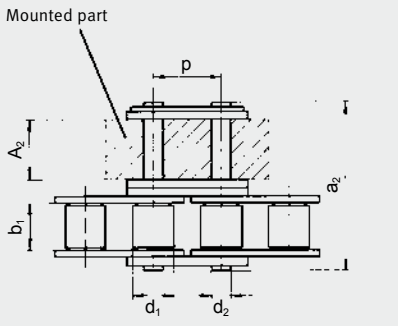

Single strand chain with double strand connecting link

Multiple strand connecting links permit components to be fitted easily at specific locations on the chain.

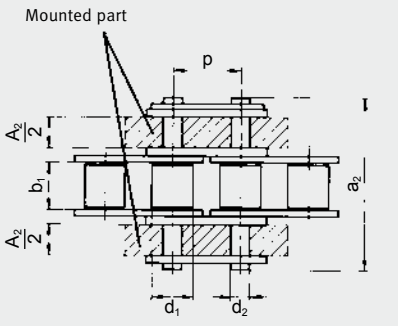

Single strand chain with double strand connecting link

Multiple strand connecting links can be supplied with normal side plates or as connecting links with straight or bent attachment plates, mounted on one or both sides.

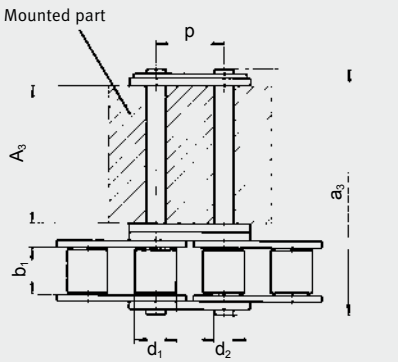

Single strand chain with triple strand connecting link

Note: The pitch of holes in the mounted part (component) differ from chain pitch.

iwis Customer Service
CallBack Tel: +49 89 76909-1600 Fax: -1198
sales-muenchen@iwis.com

iwis antriebssysteme
wir bewegen die welt

iwis® Conveyor Chains with U-shaped attachments

based on iwis chains complying with ISO 606

ISO	iwis reference	Pitch p (mm)	A (mm)	B (mm)	a (mm)	c (mm)	d (mm)	g (mm)	h (mm)	i (mm)	k (mm)	l (mm)	s (mm)	Threaded insert M (mm)	m max. (mm)
U-shaped attachment 303.2 / 303.32 / 303.9															
08B-1	L 85 SL	12.7	17.8	19.8	21.5	9.5	4.1	6.3	14.6	12.6	3.0	24.2	1.5	4	5.2
08B-2	D 85 SL	12.7	31.8	33.9	35.5	9.5	4.1	6.3	28.5	13.9	3.0	24.2	1.5	4	5.2
10B-1	M 106 SL	15.875	20.0	22.0	24.0	12.0	4.73	7.5	16.6	15.8	3.0	31.0	1.5	5	5.2
16 A-1 ANSI 80	M 1610 A	25.4	33.7	36.5	38.4	16.2	8.7	10.5	27.3	25.3	5.0	49.2	2.1	6	7.3

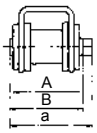

Chain width:
When U-shaped attachments are fitted between the inner and outer plates, the chain width increases above the norm.
a = pin length of connecting link

Design 303.2 with standard attachment holes

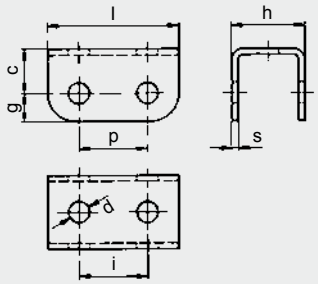

Design 303.32 with threaded inserts

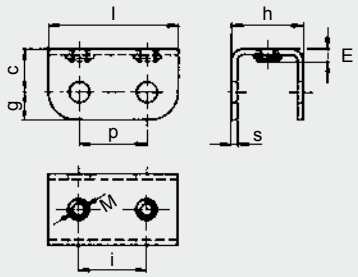

With D 85 SL threaded inserts are positioned transversely to the chain

Design 303.9 with rubber cover

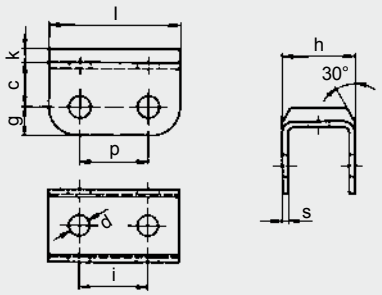

Cover material: Perbunan
Hardness: 65 Shore / Temperature: -30 up to +100 °C

SPECIAL DESIGNS

1"-double strand chain with special U-shaped attachment. Base chain: iwis M 1610 A

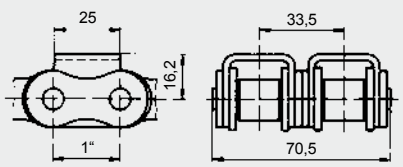

Design 303.94 for chain D 85 SL

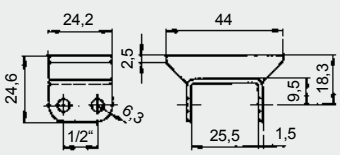

Design 303.97 for chain L 85 SL

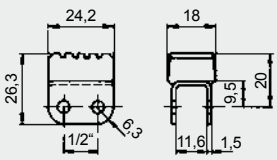

JWIS® Rapid Service for Conveyor Chains

The new Rapid Service from iwis: the fast, flexible conveyor chain range for delivery of selected chain types at short notice. MEGAlife maintenance-free versions also available. Conveyor chains with customer-specific special attachments can now also be produced in small quantities quickly and at short notice without compromising the accustomed high JWIS quality standards! Only iwis can offer this.

iwis Customer Service
Tel: +49 89 76909-1600 Fax: -1198 CallBack
sales-muenchen@iwis.com

JWIS® Rapid Service for Conveyor Chains

NEW by iwis

Express production for fast-track chains

RAPID SERVICE

iwis has set up new production lines to offer you more flexibility when you need roller chains with attachments at short notice.

The new production lines enable us to offer extra-short lead times and a high level of flexibility for small quantities of standard roller chains with bent or straight attachment plates and roller chains with elongated pins. All Rapid Service articles are also available in MEGAlife maintenance-free versions.

HIGHLIGHTS

- **Fastest delivery times**
- **Highest flexibility** for our rapid service conveyor chains program
- **Chains types:** conveyor chains with straight and bent attachment plate, as well as conveyor chains with extended bearing pins
- Delivery scope: chain sizes **08B-1 to 16B-1**
- **MEGAlife maintenance-free versions** also available
- All attachments are **nickel-plated**
- Delivery time for standard versions: **at short notice following request**

EXKLUSIVE

Conveyor chains with customer-specific special attachments can now also be produced in small quantities quickly and at short notice without compromising the accustomed high JWIS quality standards!

Only iwis can offer this.

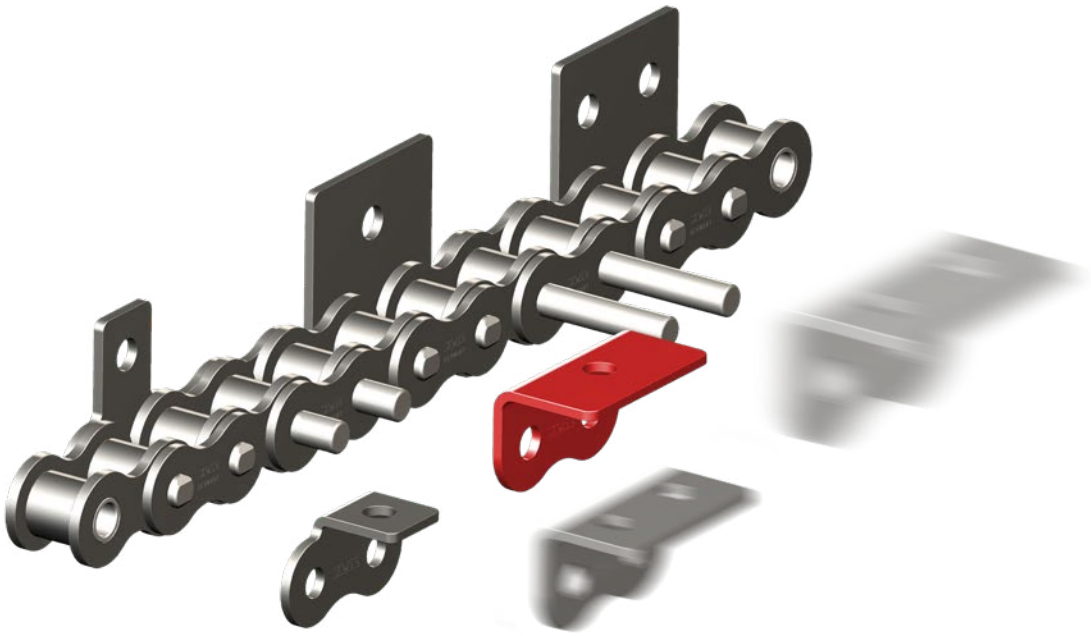

iwis Customer Service
CallBack Tel: +49 89 76909-1600 Fax: -1198
sales-muenchen@iwis.com

iwis® Conveyor Chains with straight attachment plates

based on iwis chains complying with ISO 606 and ISO 1275

ISO	iwis reference	MEGAlife version	Pitch p (")	Pitch p (mm)	a (mm)	b (mm)	d (mm)	Single strand chains e_1 (mm)	Double strand chains e_2 (mm)	Triple strand chains e_3 (mm)	g (mm)	i (mm)	l (mm)	s (mm)	Threaded insert M (mm)	Threaded insert m. max (mm)
Plate No. 102.1																
08 B-1	L 85 SL	L 85 **ML**	1/2	12.7	13.0	19.0	4.2	11.6	25.5	39.4	5.4	–	18.0	1.5	4	5.2
10 B-1	M 106 SL	M 106 **ML**	5/8	15.875	16.3	24.3	5.2	13.6	30.1	46.6	6.8	–	24.0	1.6	5	5.3
12 B-1	M 127 SL	M 127 **ML**	3/4	19.05	19.1	29.1	6.2	15.9	35.3	54.7	7.4	–	28.0	1.8	5	5.5
16 B-1	M 1611	M 1611 **ML**	1	25.4	24.6	36.6	8.2	25.9	57.8	89.7	10.4	–	36.2	3.0	6	8.2
Plate No. 103.2																
08 B-1	L 85 SL	L 85 **ML**	1/2	12.7	17.0	23.0	4.2	11.6	25.5	39.4	5.4	12.7	23.6	1.5	4	5.2
10 B-1	M 106 SL	M 106 **ML**	5/8	15.875	16.3	25.8	5.2	13.6	30.1	46.6	7.5	15.8	31.0	1.6	5	5.3
12 B-1	M 127 SL	M 127 **ML**	3/4	19.05	18.3	29.0	6.2	15.9	35.3	54.7	9.0	19.0	37.2	1.8	5	5.5
16 B-1	M 1611	M 1611 **ML**	1	25.4	28.45	41.55	8.2	25.9	57.8	89.7	10.35	25.4	47.2	3.0	6	8.2

The suffix SL indicates chains with particulary wear-resistant pins.

All types available as maintenance-free **MEGAlife** version.

www.iwis.de/**MEGAlife**

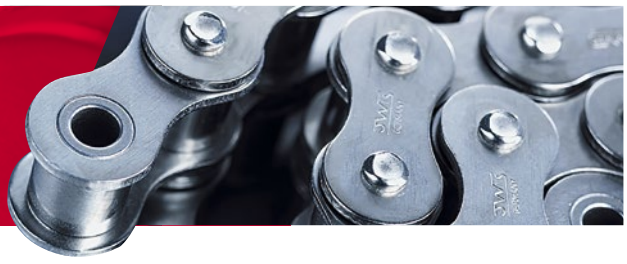

Design 102.1

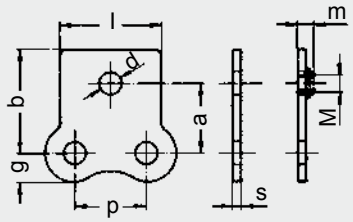

Design 103.2

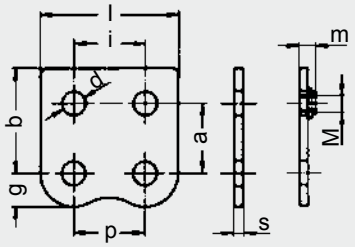

iwis Customer Service
Tel: +49 89 76909-1600 Fax: -1198 CallBack
sales-muenchen@iwis.com

iwis® Conveyor Chains with bent attachment plates

based on iwis chains complying with ISO 606 and ISO 1275

ISO	iwis reference	MEGAlife version	Pitch p (")	p (mm)	c (mm)	d (mm)	Single strand chains e_1 (mm)	f_1 (mm)	Double strand chains e_2 (mm)	f_2 (mm)	Triple strand chains e_3 (mm)	f_3 (mm)	g (mm)	h (mm)	i (mm)	l (mm)	s (mm)	Threaded insert M (mm)	m max. (mm)
Plate No. 202.1																			
08 B-1	L 85 SL	L 85 **ML**	1/2	12.7	8.0	4.2	27.6	39.6	41.5	53.5	55.4	67.4	5.4	14.0	–	18.1	1.5	4	5.2
10 B-1	M 106 SL	M 106 **ML**	5/8	15.875	9.0	5.2	33.6	49.6	50.1	66.1	66.6	82.6	6.8	18.0	–	24.0	1.6	5	5.3
12 B-1	M 127 SL	M 127 **ML**	3/4	19.05	10.0	6.2	41.1	61.1	60.5	80.5	79.9	99.9	7.4	22.6	–	28.0	1.8	5	5.5
16 B-1	M 1611	M 1611 **ML**	1	25.4	16.0	8.2	53.9	77.9	85.8	109.8	117.7	141.7	10.4	26.0	–	36.2	3.0	6	8.2
Plate No. 203.1																			
08 B-1	L 85 SL	L 85 **ML**	1/2	12.7	9.5	4.2	32.6	44.6	46.5	58.5	60.4	72.4	5.4	16.5	12.7	23.6	1.5	4	5.2
10 B-1	M 106 SL	M 106 **ML**	5/8	15.875	11.0	5.2	30.6	49.6	47.1	66.1	63.6	82.6	7.5	18.0	15.8	31.0	1.6	5	5.3
12 B-1	M 127 SL	M 127 **ML**	3/4	19.05	12.0	6.2	35.5	56.9	54.9	76.3	74.3	95.7	9.0	20.5	19.0	37.2	1.8	5	5.5
16 B-1	M 1611	M 1611 **ML**	1	25.4	18.0	8.2	57.7	83.9	89.6	115.8	121.5	147.8	10.4	29.0	25.4	47.2	3.0	6	8.2
Plate No. 203.1																			
08 B-1	L 85 SL	L 85 **ML**	1/2	12.7	9.5	4.2	32.6	44.6	46.5	58.5	60.4	72.4	5.4	16.5	12.7	23.6	1.5	4	5.2
10 B-1	M 106 SL	M 106 **ML**	5/8	15.875	11.0	5.2	30.6	49.6	47.1	66.1	63.6	82.6	7.5	18.0	15.8	31.0	1.6	5	5.3
12 B-1	M 127 SL	M 127 **ML**	3/4	19.05	12.0	6.2	35.5	56.9	54.9	76.3	74.3	95.7	9.0	20.5	19.0	37.2	1.8	5	5.5
16 B-1	M 1611	M 1611 **ML**	1	25.4	18.0	8.2	57.7	83.9	89.6	115.8	121.5	147.8	10.4	29.0	25.4	47.2	3.0	6	8.2

The suffix SL indicates chains with particulary wear-resistant pins.

All types available as maintenance-free
MEGAlife version.

www.iwis.de/**MEGAlife**

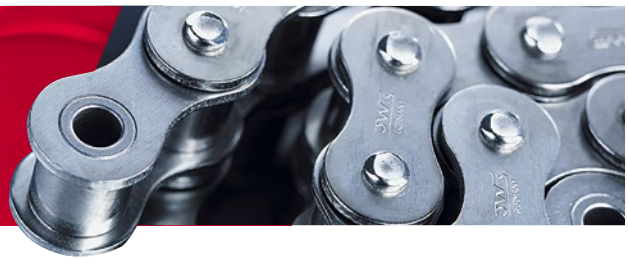

Design 202.1

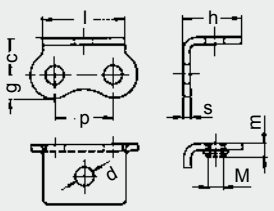

Design 203.1

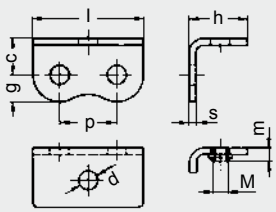

Design 203.2

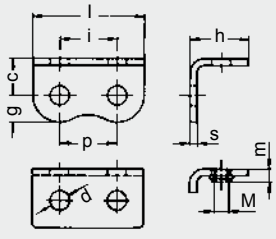

iwis Customer Service
CallBack Tel: +49 89 76909-1600 Fax: -1198
sales-muenchen@iwis.com

iwis antriebssysteme
wir bewegen die welt

iwis® Conveyor Chains extended bearing pins

based on iwis chains complying with ISO 606 and ISO 1275

ISO	iwis reference	MEGAlife version	Pitch p (")	Pitch p (mm)	Inner width b_1 (mm)	Roller diameter d_1 (mm)	Extended bearing pin diameter d_2 (mm)	Design A pin length L_1 (mm)	Design A pin length l_1 (mm)	Design A pin length L_2 (mm)	Design B pin length l_2 (mm)	Design B pin length l_3 (mm)
Pin design A, B												
08 B-1	L 85 SL	L 85 **ML**	1/2	12.7	7.75	8.51	4.45	25.5	10.0	40.5	25.0	13.0
10 B-1	M 106 SL	M 106 **ML**	5/8	15.875	9.65	10.16	5.08	30.0	12.0	48.0	30.0	15.5
12 B-1	M 127 SL	M 127 **ML**	3/4	19.05	11.75	12.07	5.72	36.0	15.0	51.0	30.0	15.5
16 B-1	M 1611	M 1611 **ML**	1	25.4	17.02	15.88	8.28	53.5	20.0	68.5	35.0	18.0

All above chains can alternatively be manufactured with duplex or triplex pins. Delivery time on request.
The suffix SL indicates chains with particulary wear-resistant pins.

All types available as maintenance-free
MEGAlife version.

www.iwis.de/**MEGAlife**

Design A

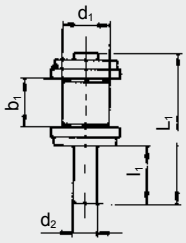

Design B

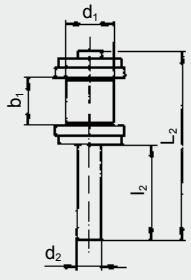

MEGAlife

MEGAlife maintenance-free roller and conveyor chains can be applied in all areas where post installation lubrication is not at all or only partly possible. This is the case in clean and dry surroundings or in applications with difficult lubrication passage. MEGAlife maintenance-free chains are corrosion resistant due to nickel-plated parts and can be utilized in a temperature range from –40 °C up to +150 °C. The chains are supplied either dry or with special-purpose lubrication in line with the requirements of the applied application.

JWIS

iwis Customer Service
Tel: +49 89 76909-1600 Fax: -1198 CallBack
sales-muenchen@iwis.com

MEGAlife I and MEGAlife II

The maintenance-free iwis chains for new conveyor technology

MORE ADDED VALUE

STARTING POINT

MEGAlife maintenance-free roller chains and conveyor chains can be used in all applications where relubrication is impossible or impractical.

OUR SOLUTION

MEGAlife maintenance-free roller and conveyor chains offer a **significantly longer service life than conventional low-maintenance/lube-free roller chains.**

The benefits for you:

- Less downtime
- Longer replacement intervals for machine and system components
- Significant reduction of maintenance costs

HIGHLIGHTS MEGALIFE I

- **Excellently qualified for normal chain applications without relubrication at speeds amounting to max. 3 m/s**
- Permanently maintenance-free under certain conditions
- Easy to dismantle due to easy break
- Applicable in corrosive environments; recommendable with lubrication, if possible
- 100 % compatibility with iwis standard conveyor chains due to the use of original iwis attachments
- MEGAlife conveyor chains with elongated pins are chemically nickel-plated
- All roller chains are mounted with shouldered pins
- Also available as transfer chain TF, power and free conveyor chain SF or grip chain

HIGHLIGHTS MEGALIFE II

- **The solution for fast running chain drives, v › 3 m/s and/or high loads**
- Considerably improved wear resistance due to a special thermo-chemical treatment of the pins which influences the hardness of the surface and optimizes herewith the adhesiveness
- Distinctive longer lifetime
- Pins and sintering bushes are optimally adjusted to each other
- Not recommendable in environments susceptible to corrosion
- Mainly applied as drive chain
- For demanding applications

MORE QUALITY

1. Seamless sintered bush made of a material specially developed for this application, hardened and treated to optimize its tribological properties
2. Pin with wear-resistant, friction-optimized coating
3. Seamless roller with corrosion-resistant coating and geometry optimized on the sinter bush

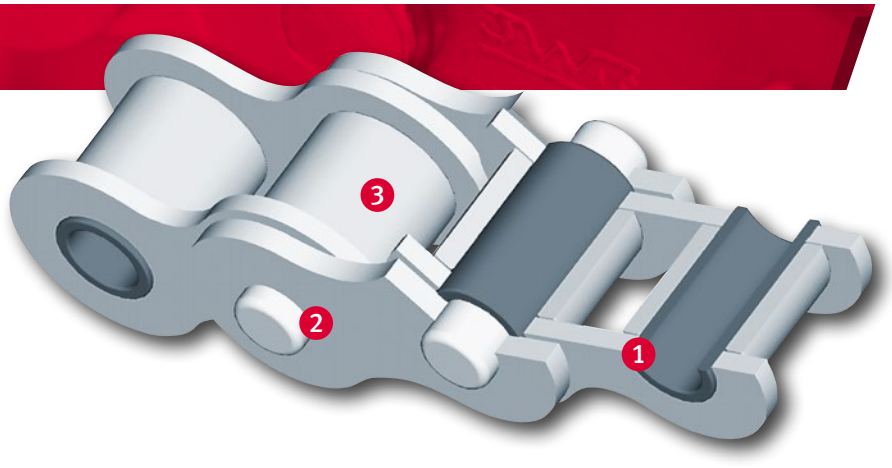

iwis Customer Service
CallBack Tel: +49 89 76909-1600 Fax: -1198
sales-muenchen@iwis.com

iwis antriebssysteme
wir bewegen die welt

MEGAlife is the benchmark **for extremely high fatigue strength and breaking resistance,** with a proven track record in many practical applications.

CUSTOMER BENEFITS

- Extremly high levels of fatigue and breaking strength
- Excellent wear resistance – even at high speeds and loads – where conventional maintenance-free chains stretch
- Protected from corrosion due to nickel-plated parts
- Temperature range from -40 °C up to +150 °C
- It's easy to convert standard chain and conveyor chain applications to MEGAlife: since construction of these chain types follows a modular principle, they are interchangeable and mutually compatible – **no special adaptation required!**
- MEGALIFE chains are clean, dry and environmentally-friendly due to absence of excess lubrication

AREAS OF APPLICATION

- Packaging and food industry
- Printing industry
- Material handling, conveyor systems
- Textile and clothing industry
- Paper manufacture and book binding industry
- Electronics industry and PCB manufacture
- Wood, glass and ceramics Industry
- Medical technology
- Lamp and lightbulb manufacture

... and of course in all areas where relubrication is not at all or only partly possible.

PRODUCT RANGE

- Roller chains according to ISO 606
- Roller chains with different attachments
- Roller chains with straight side plates
- Accumulation chains
- Transfer chains
- Grip chains
- Special conveyor chains

... almost the entire JWIS chain range can be manufactured in the maintenance-free ML version. Contact us for more details!

MORE EFFICIENCY

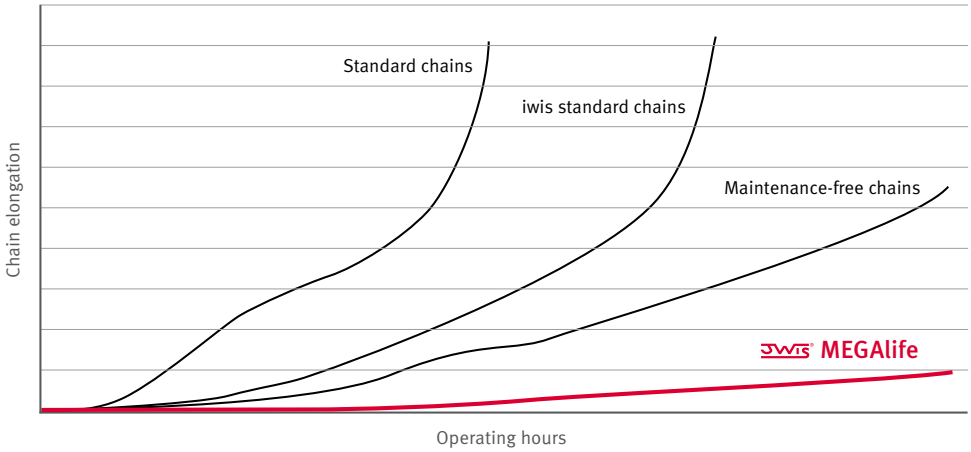

iwis Customer Service
Tel: +49 89 76909-1600 Fax: -1198 CallBack
sales-muenchen@iwis.com

iwis® MEGAlife I – Roller Chains

based on iwis roller chains complying with ISO 606

ISO	iwis reference	Pitch p (")	Pitch p (mm)	Ave. tensile strength F_B (N)	Min. tensile strength F_U (N)	Breaking area f (cm²)	Weight per m q (kg/m)	Inner link b_1 (mm) min.	Inner link b_2 (mm) min.	Inner link g (mm) max.	Outer link a_1 (mm) max. 1)	Outer link a (mm) max. 1)	Roller d_1 (mm) max.	Pin d_2 (mm) max.	Transverse pitch e (mm)	Article No.
Simplex																
06 B-1	G 67 ML*	3/8	9.525	11,000	8,900	0.28	0.41	5.72	8.53	8.20	12.90	14.10	6.35	3.31	–	50033917
08 B-1	L 85 ML	1/2	12.70	22,000	17,800	0.50	0.70	7.75	11.30	11.80	16.90	18.50	8.51	4.45	–	50026256
08 A-1 ANSI 40	L 85 AML	1/2	12.70	17,500	13,900	0.44	0.60	7.94	11.15	12.00	16.60	17.50	7.95	3.96	–	50036841
10 B-1	M 106 ML	5/8	15.875	25,000	22,200	0.67	0.95	9.65	13.28	14.40	19.50	20.90	10.16	5.08	–	50026257
12 B-1	M 127 ML	3/4	19.05	30,000	28,900	0.89	1.25	11.75	15.62	16.20	22.70	23.60	12.07	5.72	–	50026258
12 A-1 ANSI 60	M 128 AML	3/4	19.05	41,000	31,300	1.06	1.47	12.70	17.75	18.00	25.30	26.70	11.91	5.96	–	50038464
16 B-1	M 1611 ML	1	25.4	75,000	60,000	2.10	2.70	17.02	25.45	21.10	36.10	36.90	15.88	8.28	–	50028923
20 B-1	M 2012 ML	1 1/4	31.75	120,000	95,000	2.92	3.72	19.56	29.1	26.2	41.6	43.3	19.05	10.17	–	50037775
Duplex																
06 B-2	D 67 ML	3/8	9.525	19,000	16,900	0.56	0.78	5.72	8.53	8.20	23.40	24.60	6.35	3.31	10.24	50033832
08 B-2	D 85 ML	1/2	12.70	40,000	31,100	1.00	1.35	7.75	11.30	11.80	30.80	32.40	8.51	4.45	13.92	50027439
10 B-2	D 106 ML	5/8	15.875	50,000	44,500	1.34	1.85	9.65	13.28	14.40	36.00	37.50	10.16	5.08	16.59	50027509
12 B-2	D 127 ML	3/4	19.05	60,000	57,800	1.78	2.50	11.75	15.62	16.40	42.10	43.00	12.07	5.72	19.46	50027457
16 B-2	D 1611 ML	1	25.40	150,000	106,000	4.21	5.40	17.02	29.45	21.10	68.00	68.80	15.85	8.28	31.88	50033161
20 B-2	D 2012 ML	1 1/4	31.75	210,000	170,000	5.84	7.36	19.56	29.01	25.40	79.70	82.90	19.05	10.19	36.45	50033771
Triplex																
08 B-3	TR 85 ML	1/2	12.70	58,000	44,500	1.50	2.00	7.75	11.30	11.80	44.70	46.30	8.51	4.45	13.92	50027510
10 B-3	TR 106 ML	5/8	15.875	75,000	66,700	2.02	2.80	9.65	13.28	14.40	52.50	54.00	10.16	5.08	16.59	50027511
12 B-3	TR 127 ML	3/4	19.05	89,000	86,700	2.68	3.80	11.75	15.62	16.40	61.50	62.50	12.07	5.72	19.46	50027512
16 B-3	TR 1611 ML	1	25.40	219,000	160,000	6.32	8.00	17.02	25.45	21.10	99.20	100.70	15.88	8.28	31.88	50033628

* Also available in 10 m length (Art. 50035181), with straight side plates 1) Differing dimensions for cranked links
If cranked links are fitted, it should be noted that the breaking strength of the chain my be reduced by approximately 20 %.

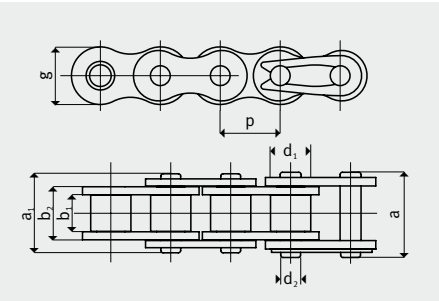

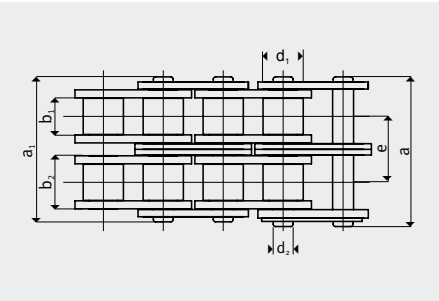

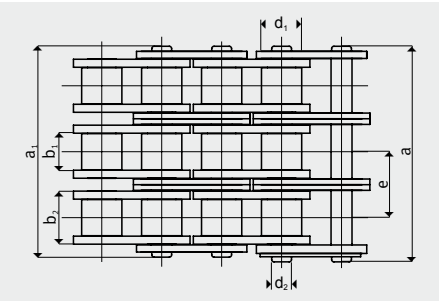

iwis Customer Service
CallBack Tel: +49 89 76909-1600 Fax: -1198
sales-muenchen@iwis.com

iwis antriebssysteme
wir bewegen die welt

MEGAlife I – Conveyor Chains with straight attachment plates

based on iwis roller chains complying with ISO 606

ISO	iwis reference	Pitch p (")	Pitch p (mm)	Ave. tensile strength F_B (N)	Min. tensile strength F_U (N)	Breaking area f (cm²)	Weight per m q (kg/m)	Inner link b_1 (mm) min.	Inner link b_2 (mm) min.	Inner link g (mm) max.	Outer link a_1 (mm) max. [1]	Outer link a (mm) max. [1]	Roller d_1 (mm) max.	Pin d_2 (mm) max.	Transverse pitch e (mm)	Article No.
Simplex/Duplex – MEGAlife roller chains with straight side plates																
08B-1	L 85 ML-GL	1/2	12.7	–	17,800	0.5	0.7	7.75	11.3	12.2	16.9	18.5	8.51	4.45	–	50049011
08B-2	D 85 ML-GL	1/2	12.7	–	31,100	1	1.35	7.75	11.3	12.2	30.8	32.4	8.51	4.45	13.92	50046481
10 B-1	M 106 ML-GL	5/8	15.875	24,000	22,200	0.67	0.95	9.65	13.28	13.90	19.50	20.90	10.16	5.08	–	50035304
10 B-2	D 106 ML-GL	5/8	15.875	47,500	44,500	1.34	1.85	9.65	13.28	13.90	36.00	37.50	10.16	5.08	16.59	50034083
12 B-1	M 127 ML-GL	3/4	19.05	30,000	28,900	0.89	1.30	11.75	15.62	16.10	22.70	23.60	12.07	5.72	–	50037351
12 B-2	D 127 ML-GL	3/4	19.05	63,000	57,800	1.78	2.50	11.75	15.62	16.10	42.10	43.00	12.07	5.72	19.46	50034084
16B-1	M 1611 ML-G	1	25.4	77,000	60,000	2.1	2.7	17.02	25.45	20.65	36.1	36.9	15.88	8.28	–	50048583
16B-2	D 1611 ML-GL	1	25.4	151,000	106,000	4.21	5.4	17.02	25.45	20.65	68	68.8	15.88	8.28	31.88	50048584

[1] Differing dimensions for cranked links If cranked links are fitted, it should be noted that the breaking strength of the chain my be reduced by approximately 20 %.

HIGHLIGHTS

- Optimum solution for conveyors and transport systems
- Compared to competition products, MEGAlife chains maintain significantly higher rigidity and less wear elongation during their entire service life
- Extremely high availability of conveyor systems, as the customary shutdowns for regular maintenance are no longer necessary
- Guaranteed long service life and cleanliness of conveyor systems in the automotive, logistics and other maintenance-free industries

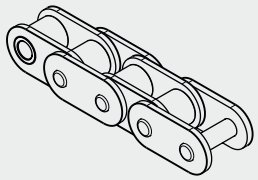

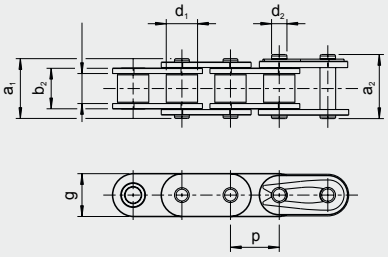

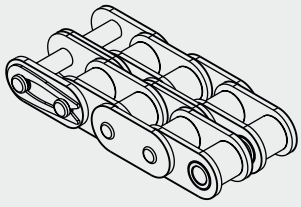

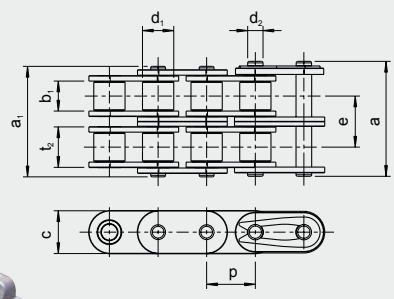

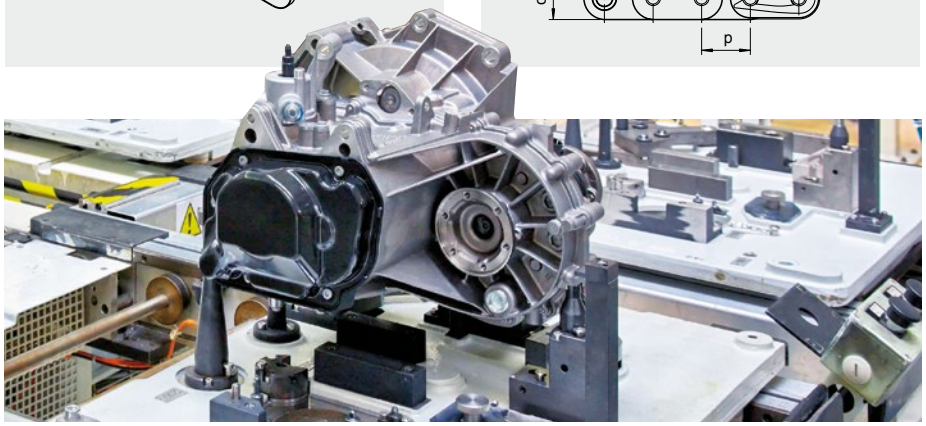

iwis Customer Service
Tel: +49 89 76909-1600 Fax: -1198 CallBack
sales-muenchen@iwis.com

iwis® MEGAlife I – Conveyor Chains with straight attachment plates

based on iwis roller chains complying with ISO 606

ISO	iwis reference	Pitch [2] p (")	p (mm)	a (mm)	b (mm)	d (mm)	Simplex chains e_1 (mm)	Duplex chains e_2 (mm)	Triplex chains e_3 (mm)	g (mm)	i (mm)	l (mm)	s (mm)	Threaded insert M (mm)	m max. (mm)
Plate No. 102.1															
08 B-1	L 85 ML [1]	1/2	12.70	13.0	19.0	4.2	11.6	25.5	39.4	5.4	–	18.0	1.5	4	5.2
10 B-1	M 106 ML [1]	5/8	15.875	16.3	24.3	5.2	13.6	30.1	46.6	6.8	–	24.0	1.6	5	5.3
12 B-1	M 127 ML [1]	3/4	19.05	19.1	29.1	6.2	15.9	35.3	54.7	7.4	–	28.0	1.8	5	5.5
16 B-1	M 1611 ML	1	25.40	24.6	36.6	8.2	25.9	57.8	89.7	10.4	–	36.2	3.0	6	8.2
Plate No. 103.1 and 103.2															
08 B-1	L 85 ML [1]	1/2	12.70	17.0	23.0	4.2	11.6	25.5	39.4	5.4	12.7	23.6	1.5	4	5.2
10 B-1	M 106 ML [1]	5/8	15.875	16.3	25.8	5.2	13.6	30.1	46.6	7.5	15.8	31.0	1.6	5	5.3
12 B-1	M 127 ML [1]	3/4	19.05	18.3	29.0	6.2	15.9	35.3	54.7	9.0	19.0	37.2	1.8	5	5.5
16 B-1	M 1611 ML	1	25.40	28.45	41.55	8.2	25.9	57.8	89.7	10.35	25.4	47.2	3.0	6	8.2

[1] Also for the corresponding duplex and triplex chains [2] Nominal pitch

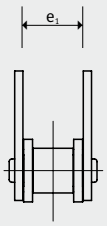

Simplex chains

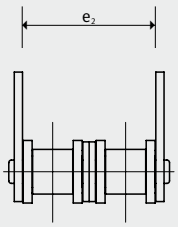

Duplex chains

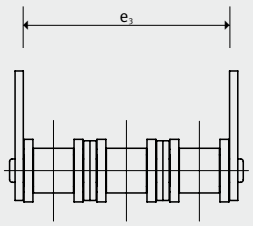

Triplex chains

STRAIGHT ATTACHMENT PLATES

The versions shown are also available as snap-on and outer links for final assembly and repair.

Straight attachments can be fitted on one or both sides of every outer link or at longer intervals.

Additional conveyor chains and threaded inserts on request.

Design 102.1

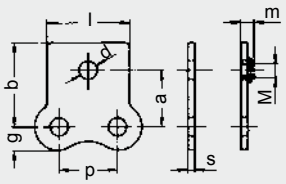

102.31 with threaded insert*

Design 103.1

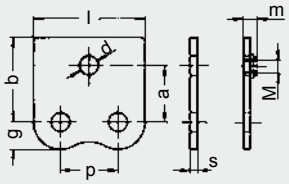

103.31 with threaded insert*

Design 103.2

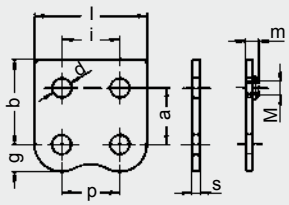

103.32 with threaded insert*

* Available on request.

iwis Customer Service
CallBack Tel: +49 89 76909-1600 Fax: -1198
sales-muenchen@iwis.com

iwis® MEGAlife I – Conveyor Chains with bent attachment plates

based on iwis roller chains complying with ISO 606

ISO	iwis reference	Pitch [3] p (")	p (mm)	c (mm)	d (mm)	Simplex chains e_1 (mm)	f_1 (mm)	Duplex chains e_2 (mm)	f_2 (mm)	Triplex chains e_3 (mm)	f_3 (mm)	g (mm)	h (mm)	i (mm)	l (mm)	s (mm)	Threaded insert M (mm)	m max. (mm)
Plate No. 202.1																		
08 B-1	L 85 ML [1]	1/2	12.70	8.0	4.2	27.6	39.6	41.5	53.5	55.4	67.4	5.4	14.0	–	18.1	1.5	4	5.2
10 B-1	M 106 ML [1]	5/8	15.875	9.0	5.2	33.6	49.6	50.1	66.1	66.6	82.6	6.8	18.0	–	24.0	1.6	5	5.3
12 B-1	M 127 ML [1]	3/4	19.05	10.0	6.2	41.1	61.1	60.5	80.5	79.9	99.9	7.4	22.6	–	28.0	1.8	5	5.5
16 B-1	M 1611 ML	1	25.40	16.0	8.2	53.9	77.9	85.8	109.8	117.7	141.7	10.4	26.0	–	36.2	3.0	6	8.2
Plate No. 203.1 and 203.2																		
08 B-1	L 85 ML [1] [2]	1/2	12.70	9.5	4.2	32.6	44.6	46.5	58.5	60.4	72.4	5.4	16.5	12.7	23.6	1.5	4	5.2
10 B-1	M 106 ML [1] [2]	5/8	15.875	11.0	5.2	30.6	49.6	47.1	66.1	63.6	82.6	7.5	18.0	15.8	31.0	1.6	5	5.3
12 B-1	M 127 ML [1] [2]	3/4	19.05	12.0	6.2	35.5	56.9	54.9	76.3	74.3	95.7	9.0	20.5	19.0	37.2	1.8	5	5.5
16 B-1	M 1611 ML	1	25.40	18.0	8.2	57.7	83.9	89.6	115.8	121.5	147.8	10.4	29.0	25.4	47.2	3.0	6	8.2

Conveyor chains D 1611 ML and TR 1611 ML on request [1] Also for corresponding duplex and triplex chains [2] Assembly of bent attachments also possible inward over the chain **except** when fitted on both sides to D 85 ML, D 106 ML and D 127 ML [3] Nominal pitch

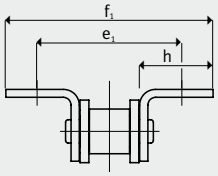

Simplex chains

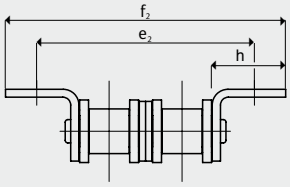

Duplex chains

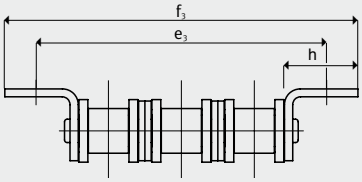

Triplex chains

BENT ATTACHMENTS

The types illustrated are also obtainable for connector and outer link for final assembly and repair. Assembly of the bent attachments with threaded insert over the chain facing inwards is not possible. Fitting bent attachments on one or both sides on each outer link or at greater spacing is possible. Other conveying chains and threaded inserts on request.

Design 202.1

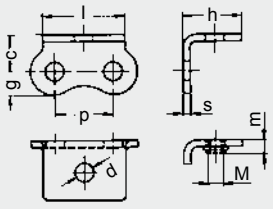

202.31 with threaded insert*

Design 203.1

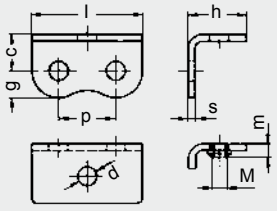

203.31 with threaded insert*

Design 203.2

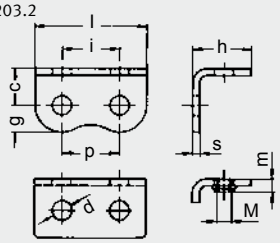

203.32 with threaded insert*

* Available on request.

iwis Customer Service
Tel: +49 89 76909-1600 Fax: -1198 CallBack
sales-muenchen@iwis.com

iwis® MEGAlife I – Conveyor Chains with extended pins

based on iwis chains complying with ISO 606

ISO	iwis reference [1]	Pitch [2] p (*)	p (mm)	Inner width b_1 (mm)	Roller Ø d_1 (mm)	Pin Ø d_2 (mm)	L_1 (mm)	Design A l_1 (mm)	Design A L_2 (mm)	Design B and C l_2 (mm)	Design B and C l_3 (mm)
Pin design A, B, C											
08 B-1	L 85 ML[1]	1/2	12.7	7.75	8.51	4.45	25.5	10.0	40.5	25.0	13.0
10 B-1	M 106 ML[1]	5/8	15.875	9.65	10.16	5.08	30.0	12.0	48.0	30.0	15.5
12 B-1	M 127 ML[1]	3/4	19.05	11.75	12.07	5.72	36.0	15.0	51.0	30.0	15.5
16 B-1	M 1611 ML	1	25.4	17.02	15.88	8.28	53.8	20.0	68.5	35.0	18.0

[1] For multiple chains on request. [2] Nominal pitch. Other pin lengths and shapes on request.

EXTENDED PINS

The types illustrated are also available as connecting links and outer links for final assembly and repair (C only as outer link).

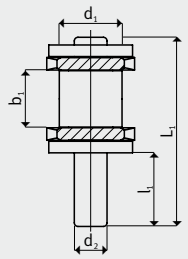

Design A

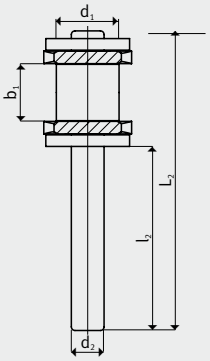

Design B

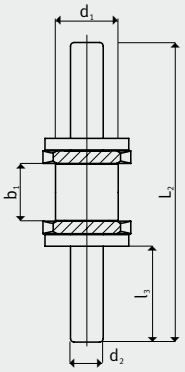

Design C

iwis® MEGAlife I – Transfer Chains

based on iwis roller chains complying with ISO 606

iwis reference	B_1	b	h	H_1	Article No. (5 m)
L 85 TF ML-1	20	7.5	3.1	15.4	50027317
M 106 TF ML-1	25	9.5	3.1	17.7	50036409
M 127 TF ML-1	30	11.3	2.9	20.0	50032663

vertical

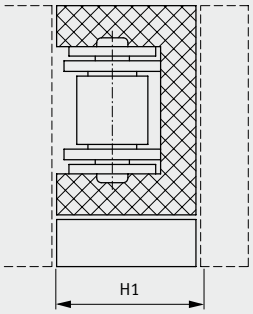

horizontal

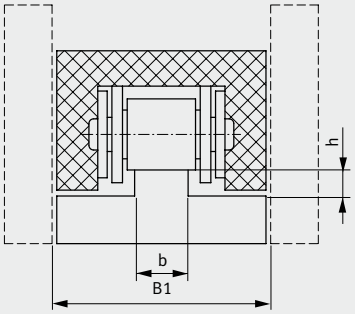

iwis Customer Service
CallBack Tel: +49 89 76909-1600 Fax: -1198
sales-muenchen@iwis.com

iwis® MEGAlife II – Roller Chains
according to ISO 606

ISO	iwis reference	Pitch p (")	Pitch p (mm)	Ave. tensile strength F_B (N)	Min. tensile strength F_U (N)	Bearing area f (cm²)	Weight per m q (kg/m)	Inner link: b_1 (mm) min.	Inner link: b_2 (mm) min.	Inner link: g (mm) max.	Outer link: a_1 (mm) max. [1]	Outer link: a (mm) max. [1]	Roller d_1 (mm) max.	Pin d_2 (mm) max.	5 m versions: Transverse pitch e (mm)	Article No.
Simplex																
06 B-1	G 67 ML-2*	3/8	9.525	11,000	8,900	0.28	0.41	5.72	8.53	8.20	12.90	14.10	6.35	3.31	–	50030791
08 B-1	L 85 ML-2	1/2	12.70	22,000	17,800	0.50	0.70	7.75	11.30	12.20	16.90	18.50	8.51	4.45	–	50030461
10 B-1	M 106 ML-2	5/8	15.875	25,000	22,200	0.67	0.95	9.65	13.28	14.40	19.50	20.90	10.16	5.08	–	50030462
12 B-1	M 127 ML-2	3/4	19.05	30,000	28,900	0.89	1.25	11.75	15.62	16.40	22.70	23.60	12.07	5.72	–	50030463
16 B-1	M 1611 ML-2	1	25.40	75,000	60,000	2.10	2.72	17.02	25.45	21.10	36.10	36.90	15.88	8.28	–	50030464
20 B-1	M 2012 ML-2	1 1/4	31.75	120,000	95,000	5.84	3.72	19.56	29.10	26.60	77.00	79.70	19.05	10.17	36.45	50033036
Duplex																
06 B-2	D 67 ML-2	3/8	9.525	19,000	16,900	0.56	0.78	5.72	8.53	8.20	23.40	24.60	6.35	3.31	10.24	50031074
08 B-2	D 85 ML-2	1/2	12.70	40,000	31,100	1.00	1.35	7.75	11.30	12.20	30.80	32.40	8.51	4.45	13.92	50030465
10 B-2	D 106 ML-2	5/8	15.875	49,000	44,500	1.34	1.85	9.65	13.28	14.40	36.00	37.50	10.16	5.08	16.59	50030466
12 B-2	D 127 ML-2	3/4	19.05	61,000	57,800	1.78	2.50	11.75	15.62	16.40	42.10	43.00	12.07	5.72	19.46	50030467
Triplex – ML-2 Roller Chains on request																
Simplex – ANSI Roller Chains, complying with ISO 606, American Standard																
08 A-1 ANSI 40	L 85 AML-2	1/2	12.70	17,500	13,900	0.44	0.60	7.94	11.15	12.00	16.60	17.50	7.95	3.96	–	50033770
12 A-1 ANSI 60	M 128 AML-2	3/4	19.05	41,000	31,300	1.06	1.47	12.70	17.75	18.00	25.30	26.70	11.91	5.96	–	50031073
16 A-1 ANSI 80	M 1610 AML-2	1	25.40	68,000	55,600	1.79	2.57	15.88	22.40	22.80	32.00	33.90	15.88	7.94	–	50032667
ML-2 Conveyor Chains on request																

[1] Differing dimensions for cranked links. If cranked links are fitted, it should be noted that the breaking strength of the chain may be reduced by approximately 20%. * straight side plates

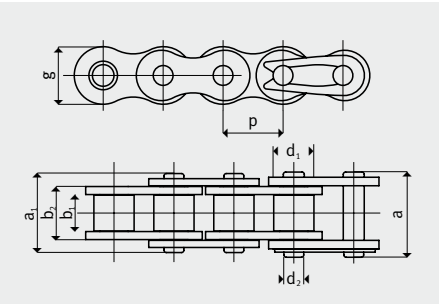

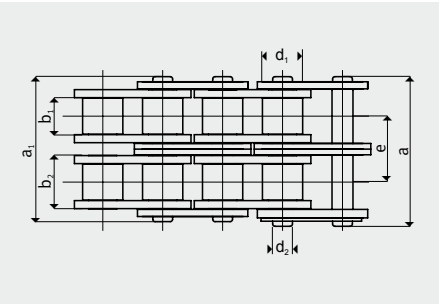

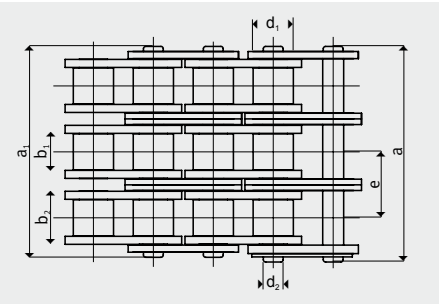

INDIVIDUAL COMPONENTS AND CONNECTING LINKS

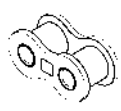

Standard designation B
Inner link

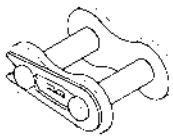

Standard designation E
Connecting link with spring clip

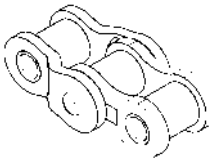

Standard designation C
Double cranked link

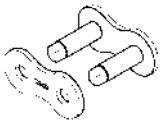

Standard designation A
Outer link

iwis Customer Service
Tel: +49 89 76909-1600 Fax: -1198 CallBack
sales-muenchen@iwis.com

MEGAlife Conveyor Chains

Examples of special chain designs

MEGAlife Conveyor Chain with straight attachment plates

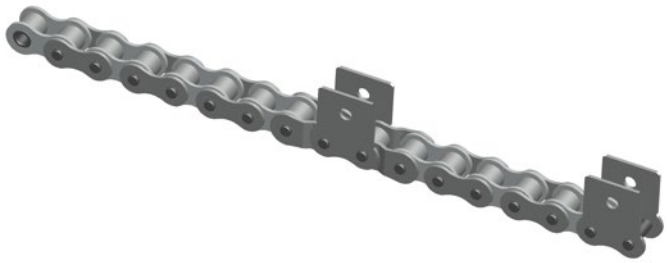

MEGAlife Conveyor Chain with extendend pins

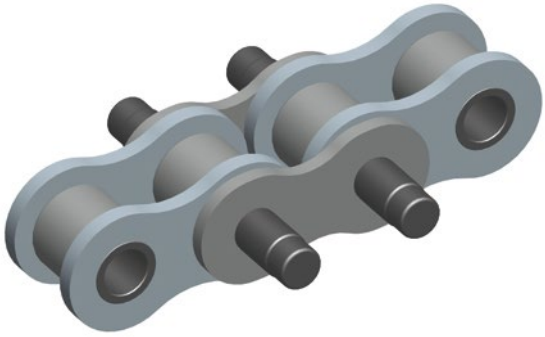

MEGAlife Conveyor Chain with bent attachment plates

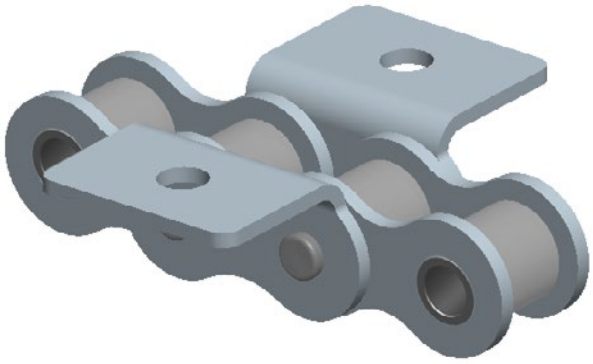

MEGAlife Conveyor Chain with special attachment plates

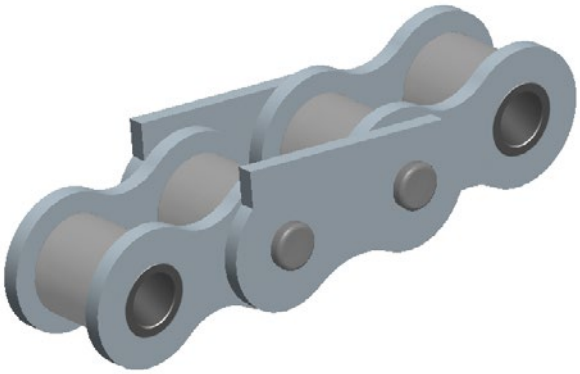

iwis Customer Service
CallBack Tel: +49 89 76909-1600 Fax: -1198
sales-muenchen@iwis.com

iwis antriebssysteme
wir bewegen die welt

iwis® MEGAlife Maintenance-Free Accumulation Chains

More efficiency and sustainability

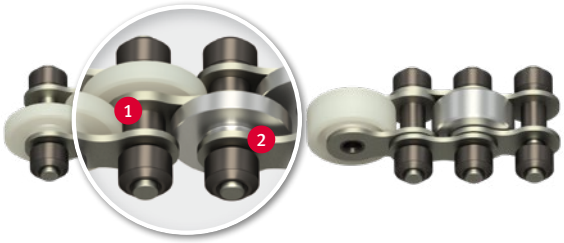

PROBLEM/INITIAL SITUATION

- Lubrication is not at all or only partly possible
- Clean and dry surroundings required
- Difficult/obstructed lubrication passage
- Contamination of installation and material to be conveyed due to chain lubrication

OUR SOLUTION

iwis accumulation chains with nickel-plated plates and pins, low-friction sintered metal rollers and a special bearing design – a technical innovation. **The first genuinely maintenance accumulation chains with low-friction rollers on the market.**

Types:

- VR: with offset transport rollers
- OS: standard version without washers
- M: standard version with washers

HIGHLIGHTS

1. **Special bearing design with sintered metal bushes**
2. Nickel-plated plates and pins, with eco-friendly, **lubricant-free surfaces** ensure reduced maintenance costs and less downtime for your application.

MEGAlife maintenance-free Chains

HIGHLIGHTS

- Excellent wear resistance – also under extreme environmental conditions
- Easy to dismantle
- Environmentally-friendly due to lubrication free chain surface
- Chains suitable for clean rooms

TECHNICAL FEATURES

- Dry chain surface and transport rollers
- Corrosion resistant
- Transport rollers optional as **plastic material or steel (stainless steel or nickel-plated)**
- Temperature range for use –40 °C up to +150 °C (for transport rollers made of steel)
- iwis MEGAlife accumulation chains are available in the new iwis or classic design in 1/2" and 3/4" pitch
- Transport rollers made of sintered metal reduce friction. This leads to reduction of driving power and strain on the chain.

AREAS OF APPLICATION

- Electronic industry and circuit board manufacture
- Packaging and food industry
- Conveyor-equipment
- Wood, glass and ceramic industry
- Medical technology

... and of course in all areas where relubrication is not at all or only partly possible.

EFFICIENT

Comparison of frictional force

Chain with iwis low-friction rollers

Chain with classic idler rollers

LONG SERVICE LIFE

Service life comparison (accumulation chains without relubrication)

iwis MEGAlife maintenance-free accumulation chains

Std. competitor chains

ECONOMICAL

Comparison of friction coefficient

iwis MEGAlife chains

Standard competitor chains

30% more efficient with iwis low-friction rollers

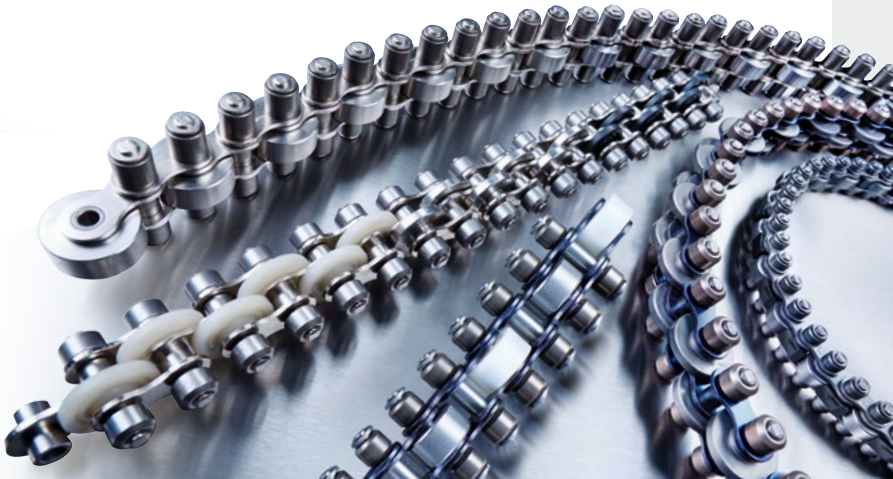

iwis Customer Service
Tel: +49 89 76909-1600 Fax: -1198 CallBack
sales-muenchen@iwis.com

iwis® MEGAlife Accumulation Chains

Range of products

iwis reference	Pitch p (mm)	Chain width B (mm)	b (mm)	b_4 (mm)	e (mm)	Diameter Transport rollers (mm)	Loading capacity per roller (kg)	Weight (kg/m)
Design VR: Version with offset transport rollers*								
L 88 SFK-ML	12.70	27	9.2	14.50	18.70	16.00	6	0.85
L 88 SFS-ML	12.70	27	9.2	14.50	18.70	16.00	8	1.40
M 120 SFK-ML	19.05	40	11.70	19.55	29.0	24.0 / 26.0 / 27.0 / 28.0	10	1.8
M 120 SFK-ML	19.05	45	11.70	19.55	31.5	24.0 / 26.0 / 27.0 / 28.0	10	1.8
M 120 SFS-ML	19.05	40	11.70	19.55	29.0	24.0 / 26.0 / 27.0 / 28.0	15	2.8
M 120 SFS-ML	19.05	45	11.70	19.55	31.5	24.0 / 26.0 / 27.0 / 28.0	15	2.8

* Also available with optional **V2A** accumulation rollers

Design VR: offset fitted rollers

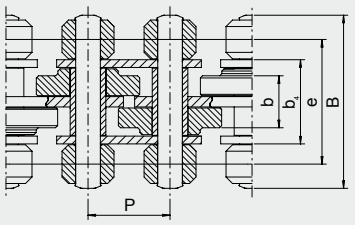

SFK – with plastic conveyor rollers
SFS – with hardened steel conveyor rollers

iwis reference	Pitch p (mm)	Chain width B (mm)	e (mm)	b_1 (mm)	b_2 (mm) max.	b_4 (mm) max.	Width b (mm)	Diameter Transport rollers (mm)			Loading capacity per roller (kg)	Diameter Roller d_1 (mm)	Diameter Pin d_2 (mm)	Weight (kg/m)
Design OS: Standard version without washers														
L 85 SFK-ML	12.7	27	18.7	7.75	11.3	14.5	7.5	16.0	17.0	18.0	6	8.52	4.45	1.2
L 85 SFS-ML	12.7	27	18.7	7.75	11.3	14.5	7.5	16.0	17.0	–	8	8.52	4.45	1.8
M 127 SFK-ML	19.05	40	27.5	11.75	15.62	19.55	11.0	24.0	26.0	28.0	10	12.07	5.72	2.3
M 127 SFS-ML	19.05	40	27.5	11.75	15.62	19.55	11.0	24.0	26.0	28.0	15	12.07	5.72	3.1
Design M: Standard version with side-mounted washers														
M 127 SFK-ML	19.05	40	27.5	11.75	15.62	19.55	11.0	24.0	26.0	28.0	10	12.07	5.72	2.3
M 127 SFK-ML	19.05	43	29.0	11.75	15.62	19.55	11.0	24.0	26.0	28.0	10	12.07	5.72	2.3
M 127 SFK-ML	19.05	48	31.5	11.75	15.62	19.55	11.0	24.0	26.0	28.0	10	12.07	5.72	2.3
M 127 SFS-ML	19.05	40	27.5	11.75	15.62	19.55	11.0	24.0	26.0	28.0	15	12.07	5.72	3.1
M 127 SFS-ML	19.05	43	29.0	11.75	15.62	19.55	11.0	24.0	26.0	28.0	15	12.07	5.72	3.1
M 127 SFS-ML	19.05	48	31.5	11.75	15.62	19.55	11.0	24.0	26.0	28.0	15	12.07	5.72	3.1

Design OS without of washers

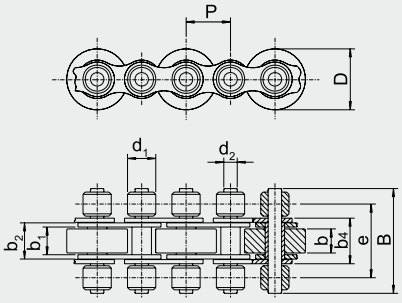

Design M normal pitch

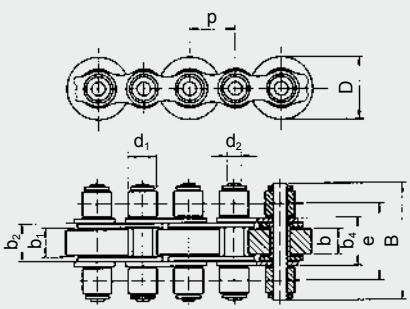

Connecting link

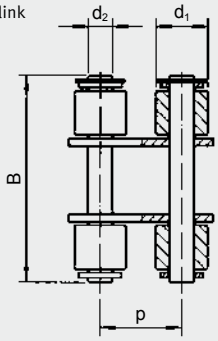

iwis Customer Service
CallBack Tel: +49 89 76909-1600 Fax: -1198
sales-muenchen@iwis.com

iwis® MEGAlife Roller and Conveyor Chains

Summary of benefits

MORE RELIABILITY

MEGAlife maintenance-free roller and conveyor chains offer a significantly longer service life than conventional low-maintenance/lube-free roller chains.

The benefits for you:

- Less downtime
- Longer replacement intervals for machine and system components
- Significant reduction of maintenance costs

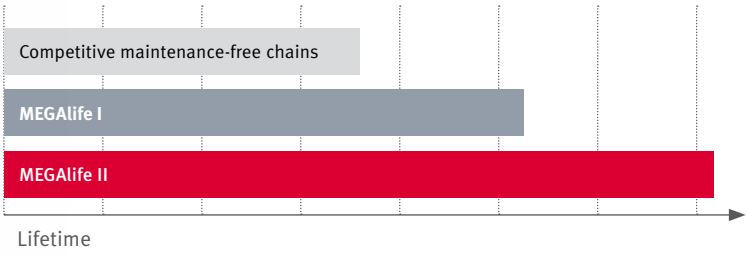

Trouble-free conversion of standard chains and conveyor chains to MEGAlife: **no additional adjustments or modifications required!**

MORE SUSTAINABILITY

MEGAlife = lubricant-free

MEGAlife maintenance-free roller chains and conveyor chains require no lubrication, so they are clean, dry and **environment-friendly**.

The benefits for you:

- Built-in relubrication units in machines and systems are no longer required.
- Lower energy costs, lower investments
- Conservation of fossil resources

iwis' own contribution for the environment!

iwis has been awarded the **ISO 14001:2004** (Environmental Management System) certificate by the Technical Inspection Association TÜV SÜD for its achievements in the field of "Development, manufacture and distribution of drive chains and conveyor chains".

CF Stainless Steel Chains

The new corrosion-free CF stainless steel chains from iwis are extremely reliable, fatigue- and corrosion-resistant. They are therefore ideal for applications in the food and beverage industry. Top iwis quality with an outstanding price-performance ratio.

Corrosion-
proof
CF Series

iwis Customer Service
Tel: +49 89 76909-1600 Fax: -1198 CallBack
sales-muenchen@iwis.com

JWIS® CF Stainless Steel Chains

Extreme anti-corrosion performance

BEST QUALITY

The new stainless steel CF chains, made of austenitic stainless steel, are **extremely reliable, fatigue- and corrosion-resistant,** so they are ideal for use in applications involving food and other contamination-sensitive products. Top iwis quality with an outstanding price-performance ratio.

APPLICATIONS

- In aggressive environments
- In environments involving the application of water or steam and strict cleaning regulations
- In environments with extreme high temperatures

HIGHLIGHTS

- All plates have a higher proportion of smooth cut edges, assuring **improved fatigue resistance, greater endurance** and reduced elongation, which in turn mean **longer service life** and **more stability.**
- All rollers are **seamless,** guaranteeing **smooth running** and extreme impact resistance at higher speeds.
- Seamless bushes reduce initial wear elongation and guarantee a significantly **higher positioning precision** than conventional stainless steel roller chains in operation. This is a major advantage in filling, conveying and packaging applications.
- **Restricted length tolerances** for even more accurate positioning
- Temperature range: -80 °C to +150 °C
- Various **special lubricants** available e.g. for high temperatures (up to max. 400 °C), low temperatures or food-grade lubricant with H1 approval
- Conveyor chains with **customer-specific attachments** can be configured and realised at short notice.
- Load-elongation diagrams can be created

If your application calls for a corrosion-resistant chain with higher breaking strength and fatigue resistance than CF stainless steel chains, we recommend our corrosion-resistant **iwis CR chains.**

For more information, see the chapter CR Chains.

SALT SPRAY TEST

In the standardised salt spray test, our CF stainless steel chains achieved higher corrosion resistance in comparison with standard corrosion-free chains available on the market.

iwis Customer Service
CallBack Tel: +49 89 76909-1600 Fax: -1198
sales-muenchen@iwis.com

iwis reference	ISO	Pitch p (mm)	Inner width b1 min. (mm)	Roller d1 max. (mm)	Pin d2 max. (mm)	Pin length a1 max. (mm)	Pin length conn. link** a max. (mm)	Plate height g (mm)	Transverse pitch e (mm)	Min. tensile strength F_U (N)	Article No.
CF Stainless Steel Chains											
G 67 CF *	06 B-1	9.525	5.72	6.35	3.28	13.5	16.8	8.2	–	6,400	40008144
D 67 CF *	06 B-2	9.525	5.72	6.35	3.28	23.8	27.1	8.2	10.24	11,000	40008147
L 85 CF	08 B-1	12.70	7.75	8.51	4.45	17.0	20.7	11.8	–	12,500	40008216
D 85 CF	08 B-2	12.70	7.75	8.51	4.45	31.0	34.9	11.8	13.92	22,000	40008149
M 106 CF	10 B-1	15.875	9.65	10.16	5.08	19.6	23.7	14.7	–	16,000	40008152
D 106 CF	10 B-2	15.875	9.65	10.16	5.08	36.2	40.3	14.7	16.59	29,000	40008153
M 127 CF	12 B-1	19.05	11.68	12.07	5.72	22.7	27.3	16.1	–	20,000	40008154
D 127 CF	12 B-2	19.05	11.68	12.07	5.72	42.2	46.8	16.1	19.46	35,000	40008156
M 1611 CF	16 B-1	25.40	17.02	15.88	8.28	36.1	41.5	21.0	–	40,000	40008157
D 1611 CF	16 B-2	25.40	17.02	15.88	8.28	67.0	73.4	21.0	31.88	85,000	40008158

* With straight side plates ** a = Conn. link with spring clip CF = corrosion-free

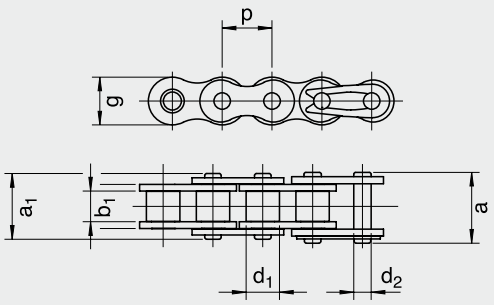

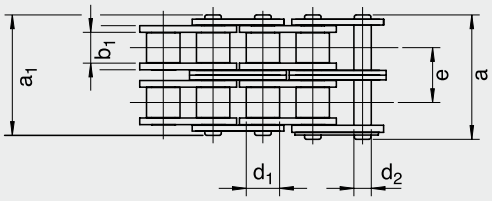

iwis Customer Service
Tel: +49 89 76909-1600 Fax: -1198 CallBack
sales-muenchen@iwis.com

iwis® CF Stainless Steel Chains with narrow bent attachments

according to ISO 606

iwis reference	ISO	Inner width b1 min. (mm)	Roller Ø d1 max. (mm)	Pin Ø d2 max. (mm)	Pin length a1 max. (mm)	Plate height g (mm)	Transverse pitch e (mm)	Min. tensile strength F_0 (N)	c (mm)	Attachment dimension ** d (mm)	e_1 (mm)	f (mm)	l (mm)	s (mm)
CF Stainless Steel Chains with narrow bent attachments														
G 67 CF *	06 B-1	5.72	6.35	3.28	13.5	8.2	–	6,400	6.5	3.5	9.5	13.5	8.0	1.1
D 67 CF*	06 B-2	5.72	6.35	3.28	23.8	8.2	10.24	11,000	6.5	3.5	–	–	8.0	1.1
L 85 CF	08 B-1	7.75	8.51	4.45	17.0	11.8	–	12,500	10.0	4.5	13.1	19.0	12.5	1.5
D 85 CF	08 B-2	7.75	8.51	4.45	30.8	11.8	13.92	22,000	10.0	4.5	–	–	12.5	1.5
M 106 CF	10 B-1	9.65	10.16	5.08	19.6	14.7	–	16,000	10.0	5.5	16.7	27.0	15.0	1.7
D 106 CF	10 B-2	9.65	10.16	5.08	36.2	14.7	16.59	29,000	10.0	5.5	–	–	15.0	1.7
M 127 CF	12 B-1	11.68	12.07	5.72	22.7	16.1	–	20,000	11.0	6.6	18.6	29.0	18.5	1.8
D 127 CF	12 B-2	11.68	12.07	5.72	42.2	16.1	19.46	35,000	11.0	6.6	–	–	18.5	1.8
M 1611 CF	16 B-1	17.02	15.88	8.28	36.1	21.0	–	40,000	18.0	9.0	28.9	41.8	25.0	3.0
D 1611 CF	16 B-2	17.02	15.88	8.28	67.0	21.0	31.88	85,000	18.0	9.0	–	–	25.0	3.0

* With straight side plates ** Other dimensions also available on request CF = corrosion-free

Design A
Bent attachment on one side
2020.1

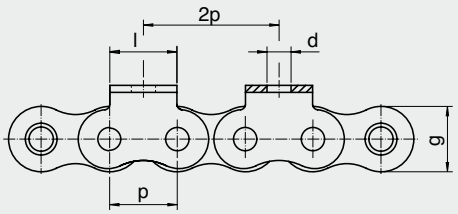

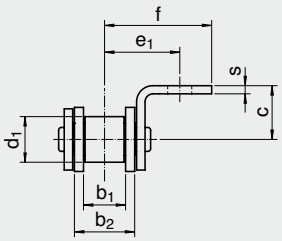

Design B
Bent attachment on both sides
2020.1

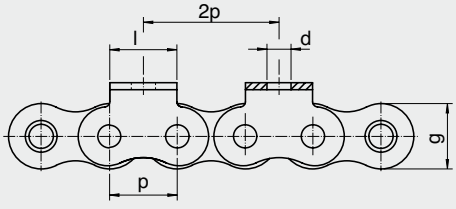

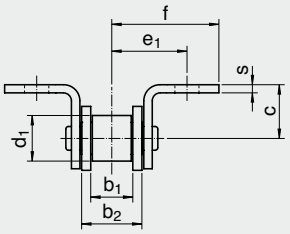

iwis Customer Service
CallBack Tel: +49 89 76909-1600 Fax: -1198
sales-muenchen@iwis.com

iwis® CF Stainless Steel Chains with wide bent attachments

according to ISO 606

iwis reference	ISO	Inner width b1 min. (mm)	Roller Ø d1 max. (mm)	Pin Ø d2 max. (mm)	Pin length a1 max. (mm)	Plate height g (mm)	Transverse pitch e (mm)	Min. tensile strength F_u (N)	Attachment dimension ** c (mm)	d (mm)	e_1 (mm)	f (mm)	i (mm)	l (mm)	s (mm)
CF Stainless Steel Chains with wide bent attachments															
G 67 CF *	06 B-1	5.72	6.35	3.28	13.5	8.2	–	6,400	5.7	3.2	9.8	13.2	9.525	18.2	1.1
D 67 CF *	06 B-2	5.72	6.35	3.28	23.8	8.2	10.24	11,000	5.7	3.2	9.8	13.2	9.525	–	1.1
L 85 CF	08 B-1	7.75	8.51	4.45	17.0	11.8	–	12,500	10.0	4.5	13.1	19.0	12.7	23.2	1.5
D 85 CF	08 B-2	7.75	8.51	4.45	30.8	11.8	13.92	22,000	10.0	4.5	13.1	19.0	12.7	–	1.5
M 106 CF	10 B-1	9.65	10.16	5.08	19.6	14.7	–	16,000	10.0	5.5	16.7	27.0	15.9	28.5	1.7
D 106 CF	10 B-2	9.65	10.16	5.08	36.2	14.7	16.59	29,000	10.0	5.5	16.7	27.0	15.9	–	1.7
M 127 CF	12 B-1	11.68	12.07	5.72	22.7	16.1	–	20,000	11.0	6.6	18.6	29.0	19.1	34.8	1.8
D 127 CF	12 B-2	11.68	12.07	5.72	42.2	16.1	19.46	35,000	11.0	6.6	18.6	29.0	19.1	–	1.8
M 1611 CF	16 B-1	17.02	15.88	8.28	36.1	21.0	–	40,000	18.0	9.0	28.9	42.0	25.4	46.5	3.0
D 1611 CF	16 B-2	17.02	15.88	8.28	67.0	21.0	31.88	85,000	18.0	9.0	28.9	42.0	25.4	–	3.0

* With straight side plates ** Other dimensions also available on request CF = corrosion-free

Design A2
Bent attachment on one side
2030.2

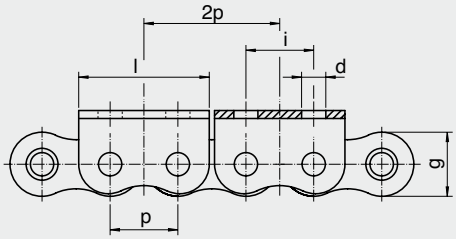

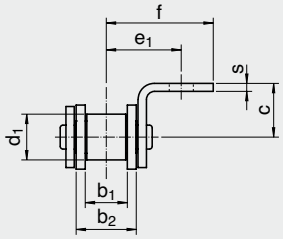

Design B2
Bent attachment on both sides
2030.2

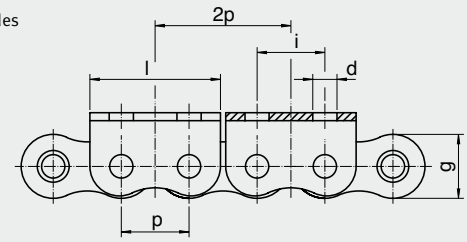

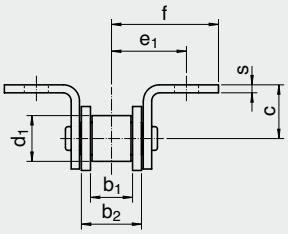

iwis Customer Service
Tel: +49 89 76909-1600 Fax: -1198 CallBack
sales-muenchen@iwis.com

iwis® CF Stainless Steel Chains with extended pins

according to ISO 606

iwis reference	ISO	Inner width b1 min. (mm)	Roller Ø d1 max. (mm)	Pin Ø d2 max. (mm)	Pin length a1 max. (mm)	Conveyor rivet length L1 max (mm)	Conveyor rivet length L2 max (mm)	Pin lengths max. l_1 (mm)	l_2 (mm)	l_3 (mm)	Min. tensile strength F_U (N)
CF Stainless Steel Chains with extended pins											
G 67 CF *	06 B-1	5.72	6.35	3.28	13.5	23.2	33.5	10.9	21.2	11.2	6,400
L 85 CF	08 B-1	7.75	8.51	4.45	17.0	30.9	44.9	15.2	29.2	15.2	12,500
M 106 CF	10 B-1	9.65	10.16	5.08	19.6	36.2	52.8	17.9	34.5	17.9	16,000
M 127 CF	12 B-1	11.68	12.07	5.72	22.7	42.8	61.3	20.7	40.2	20.9	20,000
M 1611 CF	16 B-1	17.02	15.88	8.28	36.1	67.0	98.9	33.1	65.0	33.6	40,000

* With straight side plates CF = corrosion-free **For missing dimensions see Standard CF Chains.**

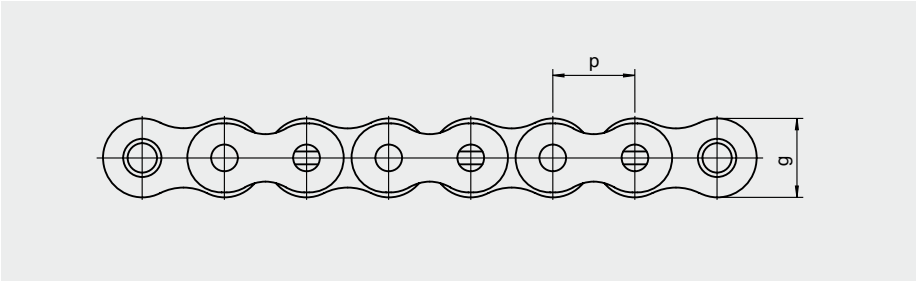

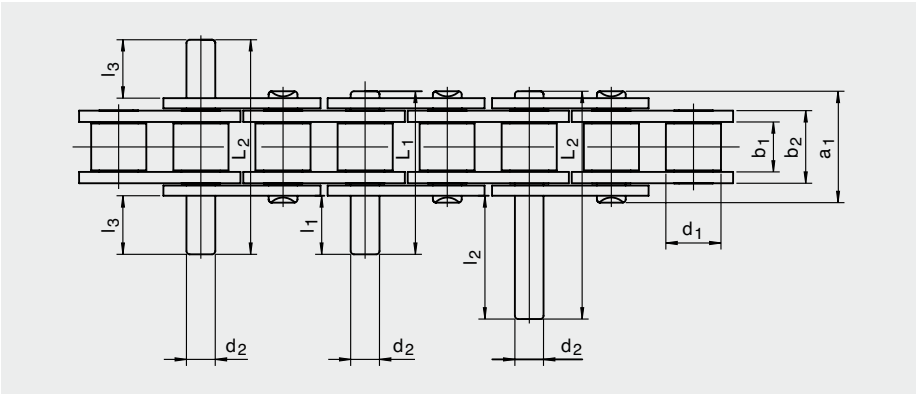

iwis Customer Service
CallBack Tel: +49 89 76909-1600 Fax: -1198
sales-muenchen@iwis.com

Notes

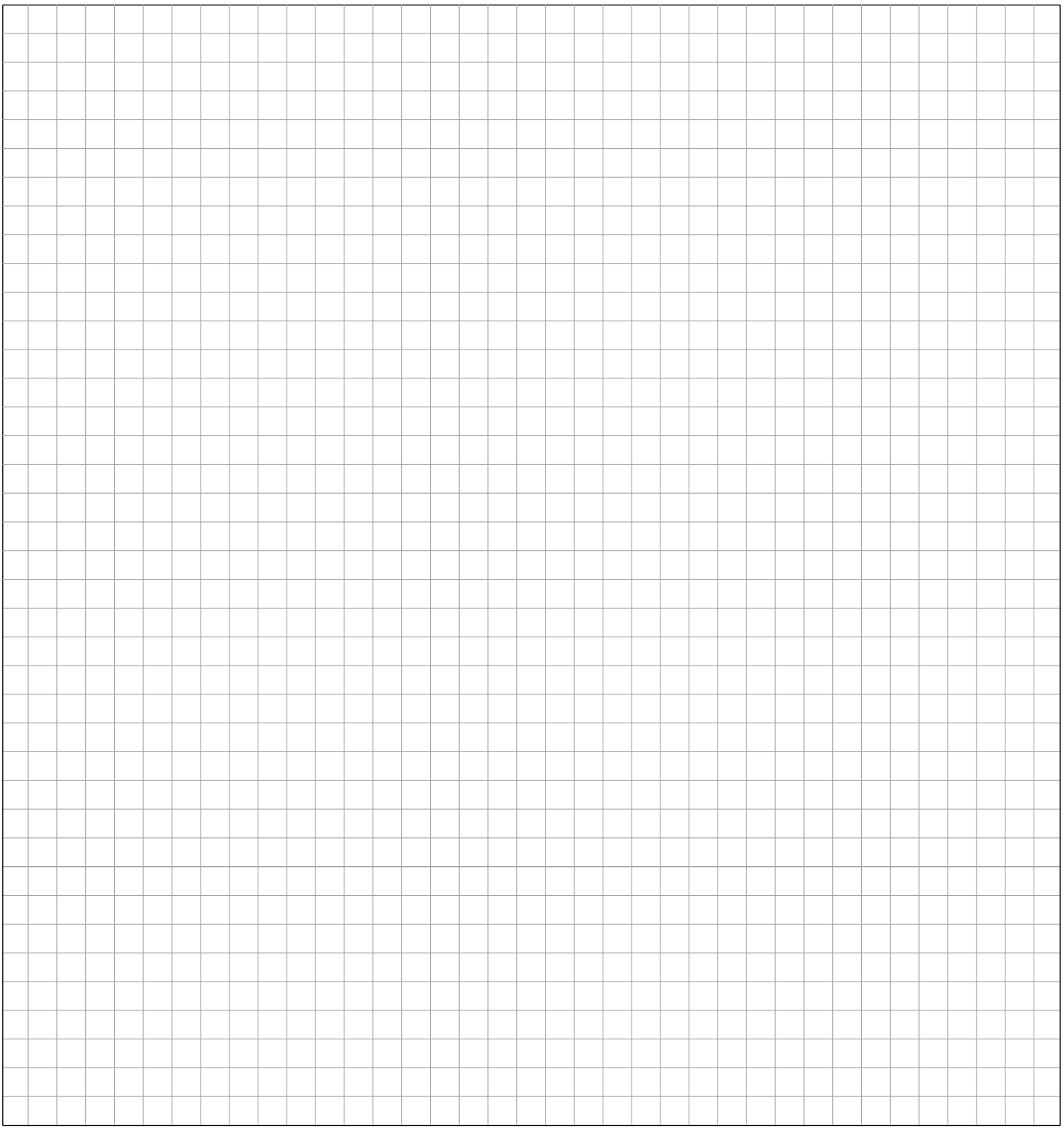

b.dry maintenance-free Stainless Steel Chains

More than just stainless steel! The **lubricant-free bushes** of b.dry chains are made of a specially designed high-performance polymer that is extreme resistant to aggressive media. The combination of optimised bearing design and rustproof CF stainless steel means that b.dry chains are **significantly more durable and wear-resistant** than comparable products. And absolutely dry, too.

b.dry

iwis Customer Service
Tel: +49 89 76909-1600 Fax: -1198 CallBack
sales-muenchen@iwis.com

iwis® b.dry maintenance-free Stainless Steel Chains

Extremely wear-resistant, corrosion-free and absolutely dry!

BEST QUALITY

b.dry chains are made from **corrosion-free, maintenance-free CF stainless steel with an optimized articulated link** that represents a masterpiece of high precision.

The secret of the b.dry range is to consign the old notions of „steel on steel“ to the past! The fact that no lubricants are needed is thanks to our b.dry bushes, which are made from a special, high-performance polymer.

The capabilities of this material are absolutely unparalleled. b.dry products run **completely dry**, but are still more **resistant to wear and corrosion, stronger** and have a **longer service life** than comparable chains.

In a dry state twice as good, with initial lubricant even four times as good.
A worthwhile investment in every respect.

HIGHLIGHTS

- Properties of individual parts that are perfectly harmonized with each other reduce chain wear and dramatically increase service life. b.dry chains are extremely reliable, withstand high dynamic loads and are corrosion-resistant.
- b.dry chains are completely dry-running. No lubrication is necessary, thanks to a high-performance plastic friction bearing in the articulated link.
- Extremely high resistance to aggressive media. Information on chemical resistance of the b.dry chains and bush available on request.
- Length tolerances compliant with ISO 606.
- Temperature range: –100 °C to +200 °C.
- No relubrication required.
- Also available as roller chains with attachments or extended pins and as custom-developed chains. ANSI chains also on request.

b dry

- High-performance polymer bushes 1 are FDA-compliant, friction-efficient and heavy-duty. Completely safe in contact with foodstuffs or other hygiene-sensitive goods.
- Stainless-steel bushes: 2 thin-walled, seamless and ball-drifted. This means that b.dry chains achieve greater strength and significantly higher wear resistance.
- CF basic chain made of austenitic stainless steel. 3

WEAR LIFE

Wear life Chain **dry**

Competitor
iwis M 127CF **b.dry**
2x as good as the competition

Wear life Chain with **initial lubrication** (upon request)

Competitor
iwis D 127CF **b.dry**
4x as good as the competition

APPLICATIONS

- In aggressive environments
- In environments in which water or steam are applied and with strict cleaning regulations for e.g.:
- Pharmaceutical industry
- Automobile industry paint lines
- Food processing industry
- Clean room applications

In a dry state **PWIS-free**

FLYER

See our product flyer for more information.

b dry

More than just stainless steel!

iwis reference	DIN ISO	Pitch p (mm)	Inner width b1 min. (mm)	Roller Ø d1 max. (mm)	Pin Ø d2 max. (mm)	Pin length a1 max. (mm)	Length grooved pin** a max. (mm)	Plate height g (mm)	Traverse pitch e (mm)	Min. tensile strength (N)	Article no.
b.dry Stainless Steel Chains											
L 85 CF **b.dry**	08 B-1	12.70	7.75	8.51	4.45	17.0	20.7	11.8	–	12,500	40009443
D 85 CF **b.dry**	08 B-2	12.70	7.75	8.51	4.45	31.0	34.9	11.8	13.92	22,000	40009454
M 106 CF **b.dry**	10 B-1	15.875	9.65	10.16	5.08	19.6	23.7	14.7	–	16,000	40009451
D 106 CF **b.dry**	10 B-2	15.875	9.65	10.16	5.08	36.2	40.3	14.7	16.59	29,000	40009455
M 127 CF **b.dry**	12 B-1	19.05	11.68	12.07	5.72	22.7	27.3	16.1	–	20,000	40009452
D 127 CF **b.dry**	12 B-2	19.05	11.68	12.07	5.72	42.2	46.8	16.1	19.46	35,000	40009456
M 1611 CF **b.dry**	16 B-1	25.40	17.02	15.88	8.28	36.1	41.5	21.0	–	40,000	40009453

** a = Spring connecting link CF = corrossion-free **Roller chains with standard attachments and custom designs can be implemented.** ANSI chains on request.

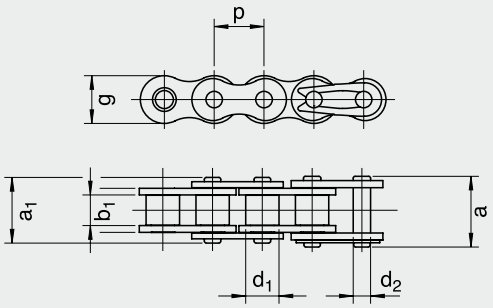

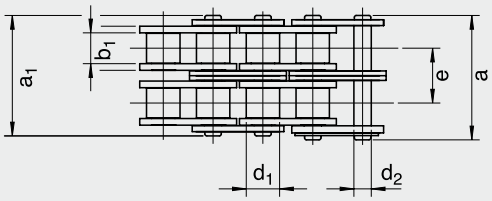

Chain elongation performance of a b.dry roller chain with and without initial lubrication

The performance of the chain can be increased fourfold by using our lubricant, which has been approved for use with foodstuffs.

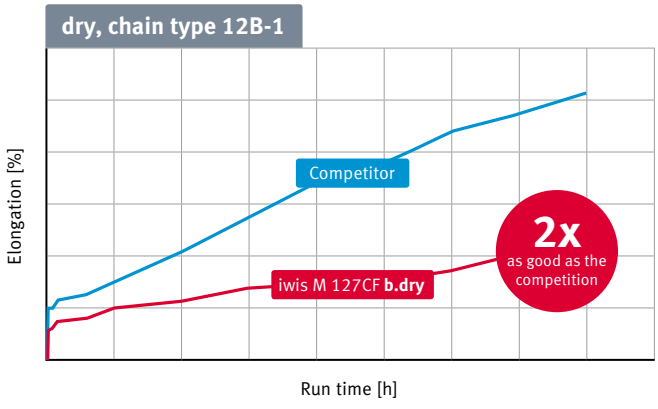

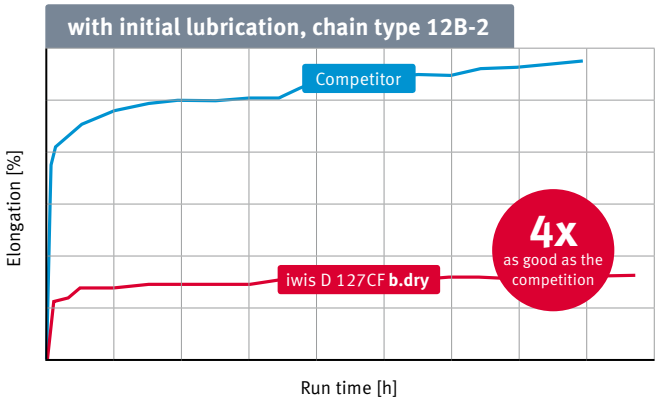

Figures not to scale.

CR Chains

iwis corrosion-resistant chains consist of hardened, highly alloyed steels showing a good wear resistance and considerably higher fatigue and breaking strengths than for stainless chains. CR chains can be used in those applications where chains despite of extreme conditions need to remain flexible and stainless due to hygienic and visual reasons. A lubrication of CR chains is recommended.

iwis Customer Service
Tel: +49 89 76909-1600 Fax: -1198 CallBack
sales-muenchen@iwis.com

iwis® CR Chains

Corrosion-resistant roller chains and conveyor chains according to ISO 606

PROBLEM/INITIAL SITUATION

Chains in corrosive media have to possess high fatigue and wear resistance. Chains made of standard steels corrode quickly whilst stainless steels made of V2-A steel do not withstand these stresses. Nickel-plated or galvanised chains only offer limited corrosion-proofing because the coating is destroyed by abrasion.

OUR SOLUTION

CR: iwis high performance chains made of hardened high-alloyed steels with good corrosion resistance and significantly higher strength than stainless steel chains.

HIGHLIGHTS

- High wear resistance if relubrication is done at regular intervals
- Good and long-lasting corrosion resistance – in comparison with surface-coated chains
- Significantly higher fatigue resistance and breaking strength figures than stainless steel chains
  → smaller dimensions possible

TECHNICAL FEATURES

	iwis CR	iwis Standard	Stainless Chain
All components	hardened	hardened	not hardened
Pre-stretched	yes	yes	not regularly
Fatigue strength	80%	100%	50%
Wear resistance	95%	100%	30%

AREAS OF APPLICATION

- Food product processing
- Drinks manufacture
- Packaging machines
- Cheese and dairy technology
- Areas where dominate moist or aggressive conditions
- Cleaning systems
- (Chemical) equipment construction

...and everywhere where chains have to remain articulated despite difficult conditions as a consequence of corrosion and may not rust on hygienic or visual grounds.

CORROSION RESISTANCE

All CR chains are provided with a reliable high quality initial lubrication.

For permanent corrossion resistance, a sufficient regular relubrication is necessary.

ISO no.	iwis reference	Sales designation Pitch x inner width	Outside width a_1 (mm)	Outside width a (mm)	Diameter d_1 (mm)	Diameter d_2 (mm)	Plate height (mm)	Tensile strength F_B (N)	Bearing area f (cm²)	Weight q (kg/m)
08 B-1	L 85 CR	1/2 x 5/16"	16.9	18.5	8.51	4.45	12.2	15,000	0.50	0.70
10 B-1	M 106 CR	5/8 x 3/8"	19.5	20.9	10.16	5.08	14.4	18,000	0.67	0.95
12 B-1	M 127 CR	3/4 x 7/16"	22.7	23.6	12.07	5.72	16.4	22,000	0.89	1.25

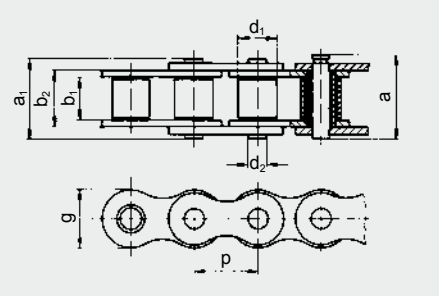

RUST- AND ACID-RESISTANCE

Dependent on
- duration
- concentration
- temperature
- variations of the mixture of the individual media. We recommend field trials to check fitness for the operational purpose.

CHAIN SPROCKETS

Depending on the circumstances, chain sprockets can be used which are made of
- stainless material
- suitable plastics
- or steel, possibly with an electro-plated coating.

iwis Customer Service
CallBack Tel: +49 89 76909-1600 Fax: -1198
sales-muenchen@iwis.com

Influencing Parameters

Technical outline: Which are the major factors causing corrosion?

THE MAJOR PARAMETERS CAUSING CORROSION

There are four main factors causing corrosion:

- the medium in which the chain moves
- the material the chain is made from
- the construction of the component
- the run time and way of application (continuous, periodically, seasonal)

CORROSION FACTORS

All CR Chains are provided with a reliable high quality initial lubrication.
For permanent corrossion resistance, a sufficient regular relubrication is necessary.

CONSTRUCTION

- Surface condition
- Other materials in environment
- Assembly (welding and riveting)
- Mechanical stress
- Design
- Protective measures
- Contact to medium (partial or total dipping)

MATERIAL

- Steel product
- Alloying additive
- Metallurgic condition (heat treatment and mechanical treatment)
- Pollution
- Composition

MEDIUM

- Motion of medium
- Chemical condition
- Viscosity
- Pollution
- PH-value (acidity)
- Temperature
- Pressure
- Concentration
- Solid deposit

TIME INFLUENCE

- Maintenance frequency
- Relubrication intervall
- Relubrication medium
- Aging of structure
- Tension development
- Change of inert layer
- Temperature changes

All corrosion factors influence the corrosion resistance to the same extent.
Please refer to our Technical Service Team for professional support.

iwis® Accumulation Chains

The new-generation iwis accumulation chains L 88SF and M 120SF combine an optimized load distribution with a more gentle and even transport of the conveyed goods. The synthetic chain guides are capable of carrying up to twice the weight because the offset roller arrangement on which the chains run reduces the load on the guides by 50 %.

iwis accumulation chains allow easy positioning of the transported material at any point along the transport path and remove the need to start and stop the chain, thereby unsettling the conveyed material. The normal chain speed is 0.1 to 0.5 m/s. By fitting a simple acceleration rail, the conveying speed can be doubled (at locations in which material is not accumulated) without changing the chain speed. This is often used to separate goods.

Thanks to a special wax lubricant, the chains are low-maintenance. Applied only to the actual links during the assembly of the chains, the conveying rollers – and therefore the conveyed material – remain clean and have no contact with the lubricant. A special-purpose initial lubrication can be used for special-purpose applications. Conveyor rollers are available in the following materials: hardened steel, stainless steel, nickel-plated or plastic (also antistatic).

iwis Customer Service
Tel: +49 89 76909-1600 Fax: -1198 CallBack
sales-muenchen@iwis.com

iwis® Accumulation Chains

for more efficient conveyor systems. Cost-effective and long-lasting.

PRODUCT RANGE

PREMIUM quality

MEGAlife Accumulation Chains

Maintenance-fee iwis accumulation chains with nickel-plated plates and pins, low-friction sintered metal rollers and special bearing design are used mainly in the electronics industry, food industry, timber, glass and ceramics processing, medical technology, automotive industry conveyors and all other applications where relubrication is problematic or impossible.

Outstanding wear resistance –
even under extreme conditions!

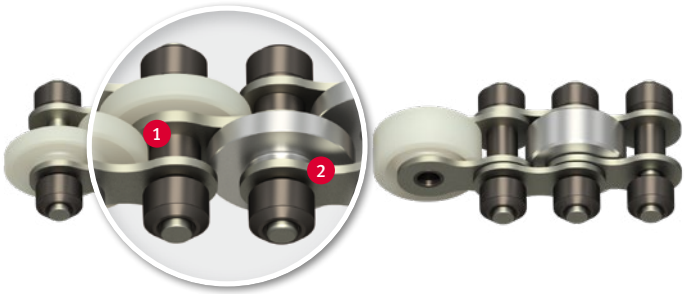

1. Special bearing design with sintered metal bushes
2. Nickel-plated plates and pins, with eco-friendly, lubricant-free surfaces ensure reduced maintenance costs and less downtime for your application.

TOP product

Accumulation Chains with offset transport rollers from iwis

This exclusive iwis accumulation chain generation has offset transport rollers on each pin, rather than a single wide roller on every second pin. As a result, each pin has a load-bearing function and transfers this load to twice as many rollers. This, has an extremely positive effect on chain guides.

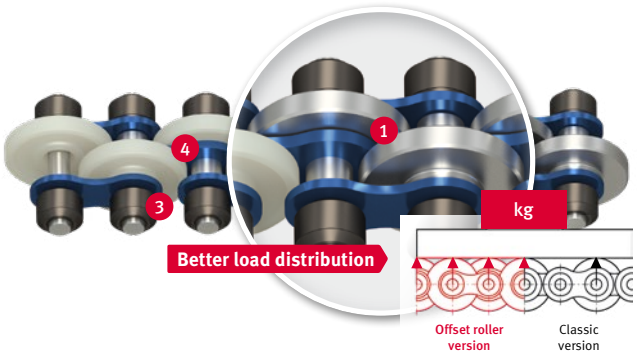

1. Offset arrangement of the accumulation rollers ensures optimised load distribution, better support and smoother running of the conveyed material.
2. Offset arrangement of the accumulation rollers reduces local load on the chain guide by **50%**. For example, plastic guides can be used for up to double the load.
3. Low-friction sintered metal rollers
4. Special bearing design

Accumulation Chains from iwis

iwis accumulation chains have idler rollers on both sides that serve two purposes: firstly, they engage with the sprocket teeth to transmit power, and secondly, they support the chain in the profile. One special feature are the slightly protruding bushes in the inner link 1 which prevent contact corrosion between inner link and outer plate.

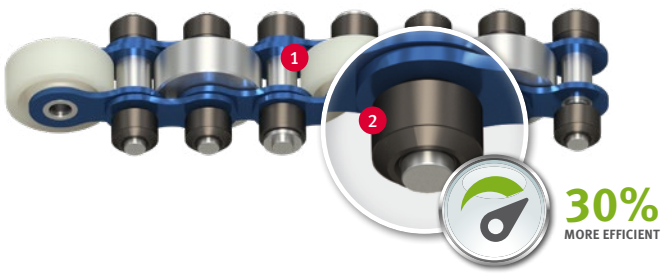

All 1/2" and 3/4" iwis accumulation chains are fitted with low-friction sintered metal rollers 2 that provide **consistent and extreme light running** and are not slowed down by lubricant. The length of our application conveyor can therefore be built about **30% longer** without any need for modification of the drive motors; alternatively, if the system length remains unchanged, smaller drive units may be fitted. Less strain on the chain and drive means **a longer service life for the entire conveyor system.**

iwis Customer Service
CallBack Tel: +49 89 76909-1600 Fax: -1198
sales-muenchen@iwis.com

NEW from iwis — b.smart Accumulation Chain

Know-how meets efficiency – the new iwis **b.smart** accumulation chain. Configured for most conveyor applications – designed for optimum transportation of conveyed material.

Put robust, durable **b.smart** accumulation chains to work for you – proven iwis® quality at an attractive price!

Optimum relubrication

The service life of a chain depends on correct and adequate relubrication. After a certain time, which may vary according to operating conditions, the lubricant applied originally is eventually used up due to the oscillating motion of the chain bearing. Inadequate lubrication causes boundary friction, which in turn leads to fretting corrosion and increased chain wear. Selection of the correct lubricant and lubrication method are therefore a decisive factor in assuring that the relubrication process is effective.

ABSOLUTELY safe — Protection for fingers + parts

Accumulation chains with finger and small parts protection feature optimum cover of the space between one transport roller and the next, preventing the ingress of small parts that could jam the rollers and/or chain link. In addition, the cover prevents the deliberate or accidental insertion of fingers while the conveyor is operating – an active contribution to accident prevention in line with increasingly strict industrial safety requirements.

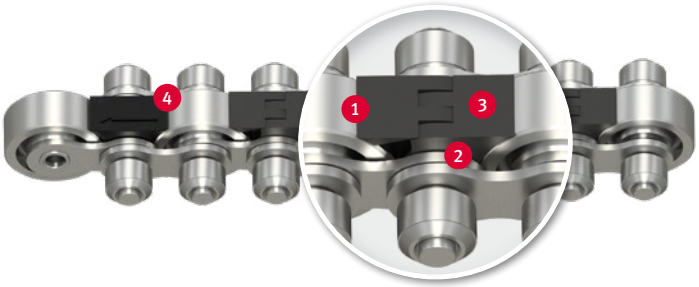

Safety for operators and machines

1. 100% cover of the space between transport rollers in accordance with required bend radii of the selected chain type
2. Firm mounting of plastic clip on inner link
3. No abrasive strain on conveyed goods, workpiece carriers or transport rollers
4. Two different finger protection versions – with and without joint

EXTREMELY flexible — Side Bow Accumulation Chains

iwis side bow accumulation chain with offset rollers 1: The modular solution for direction changes in conveyor systems with extremely tight bend radii **(› 350 mm)**. Optimum load distribution as transported material lies flat on links 2 even in bends, thus reducing chain wear.

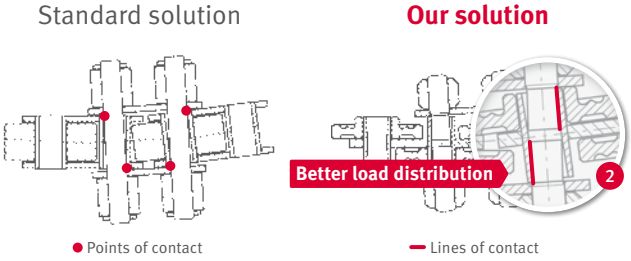

iwis Customer Service
Tel: +49 89 76909-1600 Fax: -1198 CallBack
sales-muenchen@iwis.com

iwis® MEGAlife Accumulation Chains

Maintenance-free iwis accumulation chains

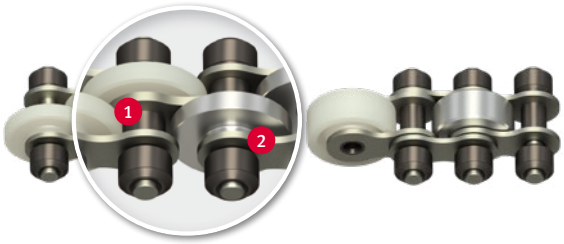

PROBLEM/INITIAL SITUATION

- Lubrication is not at all or only partly possible
- Clean and dry surroundings required
- Difficult/obstructed lubrication passage
- Contamination of installation and material to be conveyed due to chain lubrication

OUR SOLUTION

Accumulation chains from iwis with special redesigned joint and transport rollers made of sintered metal – a technical innovation – **the first genuine maintenance-free accumulation chains with light running rollers.**

Types:

- VR: with offset transport rollers
- OS: standard version without washers
- M: standard version with washers

HIGHLIGHTS

1. **Special bearing design with sintered metal bushes**
2. Nickel-plated plates and pins, with eco-friendly, **lubricant-free surfaces** ensure reduced maintenance costs and less downtime for your application.

ADDITIONAL HIGHLIGHTS

- Excellent wear resistance – also under extreme environmental conditions
- Easy to dismantle
- Environmentally-friendly due to lubrication free chain surface
- Chains suitable for clean rooms

TECHNICAL FEATURES

- Dry chain surface and transport rollers
- Corrosion resistant
- Accumulation roller materials available: plastic or steel (V2A or nickel plated)
- Temperature range for use –40 °C up to +150 °C (for transport rollers made of steel)
- Accumulation chains can be supplied as Type VR or standard version in the sizes 1/2" and 3/4"
- Transport rollers made of sintered metal reduce friction. This leads to reduction of driving power and strain on the chain
- Natural-coloured, antistatic plastic accumulation rollers will not dirty the conveyed goods

AREAS OF APPLICATION

- Electronic industry and circuit board manufacture
- Packaging and food industry
- Conveyor equipment
- Wood, glass and ceramic industry
- Medical technology

... and of course in all areas where relubrication is not at all or only partly possible.

EFFICIENT

Comparison of frictional force

Chain with iwis low-friction rollers

Chain with classic idler rollers

LONG SERVICE LIFE

Service life comparison (accumulation chains without relubrication)

iwis MEGAlife maintenance-free accumulation chains

Std. competitor chains

ECONOMICAL

Comparison of friction coefficient

iwis MEGAlife chains

Standard competitor chains

30% more efficient with iwis low-friction rollers

iwis Customer Service
CallBack Tel: +49 89 76909-1600 Fax: -1198
sales-muenchen@iwis.com

iwis reference	Pitch p (mm)	Chain width B (mm)	b (mm)	b_4 (mm)	e (mm)	Transport roller Diameter (mm)	Loading capacity per roller (kg)	Weigth (kg/m)
Design VR: Version with offset transport rollers								
L 88 SFK-ML	12.70	27	9.2	14.50	18.70	16.00	6	0.85
L 88 SFS-ML	12.70	27	9.2	14.50	18.70	16.00	8	1.40
M 120 SFK-ML	19.05	40	11.70	19.55	29.0	24.0 / 26.0 / 27.0 / 28.0	10	1.8
M 120 SFK-ML	19.05	45	11.70	19.55	31.5	24.0 / 26.0 / 27.0 / 28.0	10	1.8
M 120 SFS-ML	19.05	40	11.70	19.55	29.0	24.0 / 26.0 / 27.0 / 28.0	15	2.8
M 120 SFS-ML	19.05	45	11.70	19.55	31.5	24.0 / 26.0 / 27.0 / 28.0	15	2.8

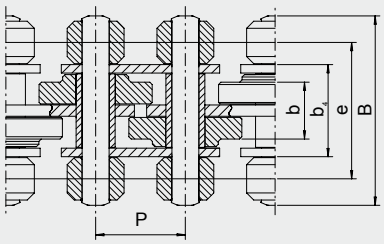

SFK – with plastic conveyor rollers SFS – with hardened steel conveyor rollers or with a choice of hardened steel or V2A conveyor rollers

iwis reference	Pitch p (mm)	Chain width B (mm)	e (mm)	b_1 (mm)	b_2 (mm) max.	b_4 (mm) max.	Width b (mm)	Transport Roller Diameter			Loading capacity per roller (kg)	Diameter Roller d_1 (mm)	Pin d_2 (mm)	Weight (kg/m)
Design OS: Standard version without washers														
L85 SFK-ML	12.7	27	18.7	7.75	11.3	14.5	7.55	–	16	17	6	8.51	4.45	0.802
L85 SFS-ML	12.7	27	18.7	7.75	11.3	14.5	7.55	–	16	17	8	8.51	4.45	1.223
M 127 SFK-ML	19.05	40	27.5	11.75	15.62	19.55	11.0	24.0	26.0	28.0	10	12.07	5.72	2.3
M 127 SFS-ML	19.05	40	27.5	11.75	15.62	19.55	11.0	24.0	26.0	28.0	15	12.07	5.72	3.1
Design M: Standard version with side-mounted washers														
M 127 SFK-ML	19.05	40	27.5	11.75	15.62	19.55	11.0	24.0	26.0	28.0	10	12.07	5.72	2.3
M 127 SFK-ML	19.05	43	29.0	11.75	15.62	19.55	11.0	24.0	26.0	28.0	10	12.07	5.72	2.3
M 127 SFK-ML	19.05	48	31.5	11.75	15.62	19.55	11.0	24.0	26.0	28.0	10	12.07	5.72	2.3
M 127 SFS-ML	19.05	40	27.5	11.75	15.62	19.55	11.0	24.0	26.0	28.0	15	12.07	5.72	3.1
M 127 SFS-ML	19.05	43	29.0	11.75	15.62	19.55	11.0	24.0	26.0	28.0	15	12.07	5.72	3.1
M 127 SFS-ML	19.05	48	31.5	11.75	15.62	19.55	11.0	24.0	26.0	28.0	15	12.07	5.72	3.1

Design OS without of washers

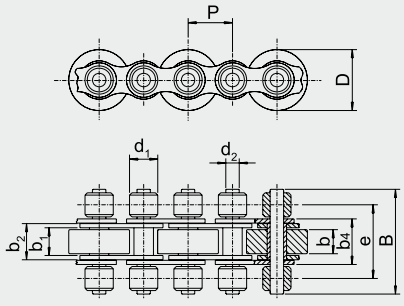

Design M with lateral washers

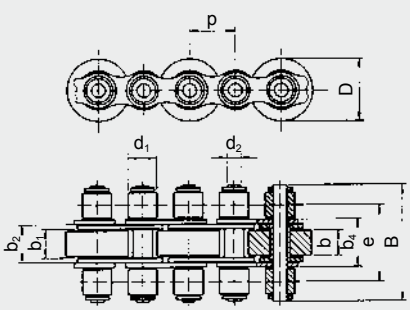

Connecting link

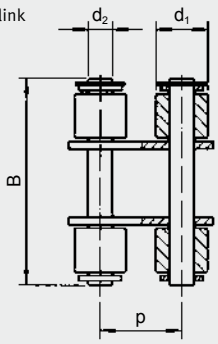

iwis Customer Service
Tel: +49 89 76909-1600 Fax: -1198 CallBack
sales-muenchen@iwis.com

iwis® Accumulation Chains

with offset transport rollers

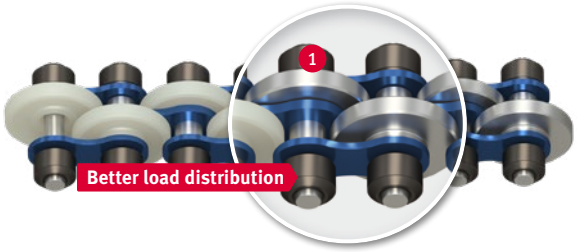

PROBLEM/INITIAL SITUATION

- Simple and reliable transport of a very wide range of workpieces and workpiece carriers
- Continuous conveying, accumulating, singling out and acceleration

OUR SOLUTION

This exclusive iwis accumulation chain generation has offset transport rollers on each pin, rather than a single wide roller on every second pin. As a result, each pin has a load-bearing function and transfers this load to twice as many rollers. This, has an extremely positive effect on chain guides.

HIGHLIGHTS

1. Offset arrangement of the accumulation rollers ensures **optimised load distribution, better support** and **smoother running of the conveyed material.**
2. Offset arrangement of the accumulation rollers **reduces local load** on the chain guide by **50%**, for example, plastic guides can be used for up to double the load.

HIGHLIGHTS

- Gentle transportation and optimum support for the material being conveyed
- In accumulating operation, roller friction only (see figure below)

- The newly developed **"light running rollers"** lead to a high reduction of drive power.

COMPARISON OF FRICTIONAL FORCE

Chain with:

iwis low-friction rollers

classic idler rollers

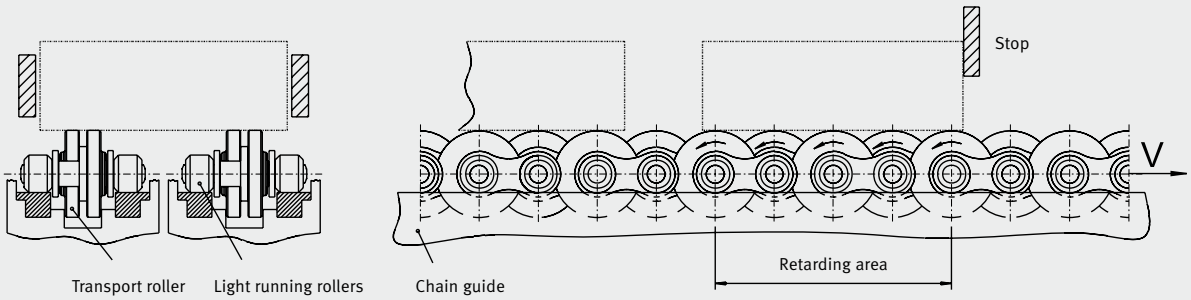

- Positioning the material transported with ease due to simple mounting points
- Chain no longer starts and stops jerkily
- Twice the transport speed is possible due to a simple acceleration rail (see figure below)

- Transport rollers made of hardened, stainless or nickel-plated steel, or plastic (also antistatic)
- The outside of the chain is clean because only the articulated points are lubricated

- Fully compatible with existing guides, deflector units and chain wheels
- Low-maintenance due to special wax lubrication (standard)
- Other initial lubrication for special applications on request

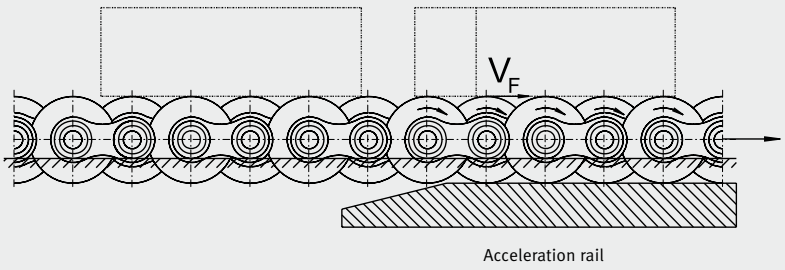

iwis Customer Service
CallBack Tel: +49 89 76909-1600 Fax: -1198
sales-muenchen@iwis.com

ADDITIONAL ADVANTAGES

- Optimum load distribution – each pin bears load
  → figure ❶ and ❷
- Better support and smoother running of the conveyed material due to the transport rollers having an offset arrangement
  → figures ❸ and ❹

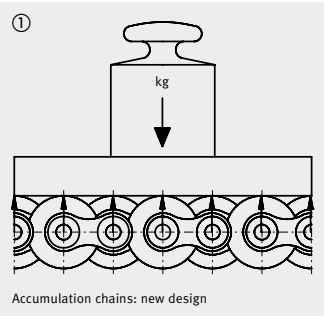

Accumulation chains: new design

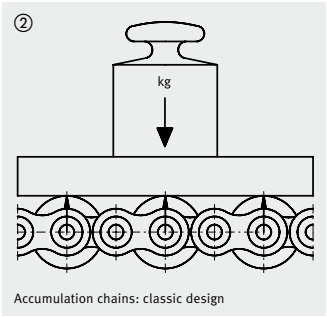

Accumulation chains: classic design

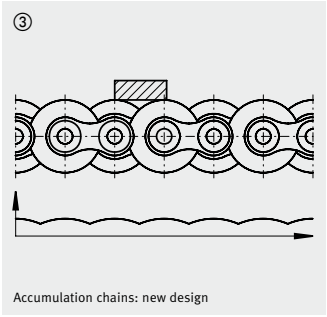

Accumulation chains: new design

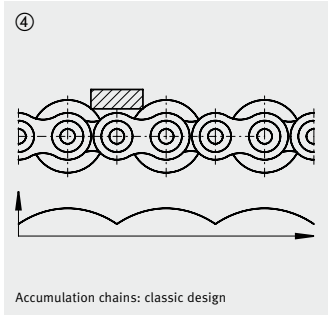

Accumulation chains: classic design

iwis reference	Pitch p (mm)	Chain width B (mm)	Chain width b (mm)	Chain width b_4 (mm)	Chain width e (mm)	Transport roller Diameter (mm)	Loading capacity per roller (kg)	Weight (kg/m)
Accumulation Chains with offset transport rollers								
L 88 SFK	12.70	27	9.2	14.50	18.70	16.00 [1]	6	0.85
L 88 SFS	12.70	27	9.2	14.50	18.70	16.00 [1]	8	1.40
M 120 SFK	19.05	40	11.70	19.55	29.0	24.0 [1] / 26.0 / 27.0 [1] / 28.0	10	1.8
M 120 SFK	19.05	45	11.70	19.55	31.5	24.0 / 26.0 / 27.0 / 28.0	10	1.8
M 120 SFS	19.05	40	11.70	19.55	29.0	24.0 [1] / 26.0 / 27.0 [1] / 28.0	15	2.8
M 120 SFS	19.05	45	11.70	19.55	31.5	24.0 / 26.0 / 27.0 / 28.0	15	2.8

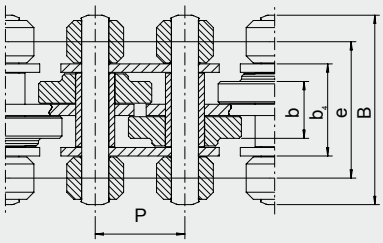

[1] Supplied ex stock

SFK – with plastic transport rollers SFS – with hardened steel transport rollers

30% more efficient with iwis low-friction rollers

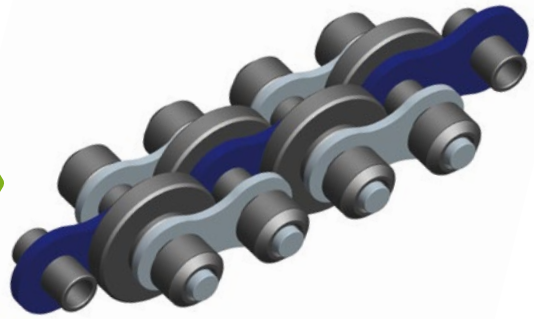

iwis Customer Service
Tel: +49 89 76909-1600 Fax: -1198 CallBack
sales-muenchen@iwis.com

JWIS® Standard Accumulation Chains

Easier, more reliable conveying of workpiece carriers

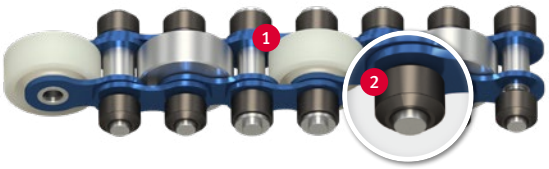

30% MORE EFFICIENT

PROBLEM/INITIAL SITUATION

- Simple and reliable transport of a very wide range of workpieces and workpiece carriers
- Continuous conveying, accumulating, singling out and acceleration

OUR SOLUTION

JWIS brand accumulation chains have idler rollers on both sides that serve two purposes: firstly, they engage with the sprocket teeth to transmit power, and secondly, they support the chain in the profile.

One special feature are the slightly protruding bushes in the inner link ❶ which prevent contact corrosion between inner link and outer plate.

++ EXKLUSIVE ++

All 1/2" and 3/4" JWIS accumulation chains are fitted with low-friction sintered metal rollers ❷ that provide **consistent and extreme light running** and are not slowed down by lubricant. The length of our application conveyor can therefore be built about **30% longer** without any need for modification of the drive motors; alternatively, if the system length remains unchanged, smaller drive units may be fitted. Less strain on the chain and drive means **a longer service life for the entire conveyor system.**

HIGHLIGHTS

- Gentle transportation and optimum support for the material being conveyed
- In accumulating operation, roller friction only (see figure below)
- The newly developed **"light running rollers"** lead to a high reduction of drive power.

COMPARISON OF FRICTIONAL FORCE

Chain with:

iwis low-friction rollers

classic idler rollers

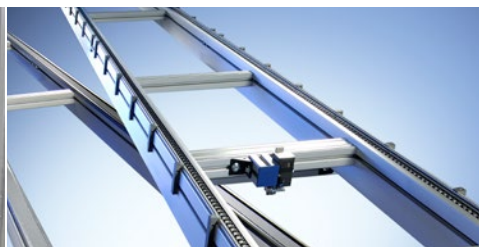

IPW-LUBRICATED IWIS ACCUMULATION CHAINS

Pinpoint lubrication of bushes inside and outside

DID YOU KNOW?

What is special about our IPW-lubricated JWIS® accumulation chains:

iwis accumulation chains are lubricated by means of an inline process during their manufacture. Exactly the right quantity of lubricant is applied with pinpoint accuracy to each chain bearing. Unlike other chains on the market, JWIS accumulation chains are not immersed in oil, which offers the following advantages:

HIGHLIGHTS

- iwis accumulation chains are dry on the outside
- Conveyed goods do not come into contact with lubricant
- No risk of over-lubrication, so no oil can splash or drip in sensitive areas
- Surrounding area is guaranteed to stay clean
- No dirt, particles, fibres or dust can adhere to the chain.

iwis Customer Service
CallBack Tel: +49 89 76909-1600 Fax: -1198
sales-muenchen@iwis.com

iwis reference	Pitch p (mm)	Chain width B (mm)	e (mm)	b_1 (mm)	b_2 (mm)	b_4 (mm)	Width b (mm)	Transport roller Diameter		Loading capacity per roller (kg)	Diameter Roller d_1 (mm)	Pin d_2 (mm)	Weight (kg/m)
Design OS: Standard version without washers													
L85 SFK	12.7	27	18.7	7.75	11.35	14.5	7.55	–	16	–	6	8.51	4.45	0.802
L85 SFS	12.7	27	18.7	7.75	11.35	14.5	7.55	–	16	–	8	8.51	4.45	1.223
M 127 SFK	19.05	40	27.5	11.75	15.62	19.55	11.0	24.0	26.0	28.0	10	12.07	5.72	1.550
M 127 SFS	19.05	40	27.5	11.75	15.62	19.55	11.0	24.0	26.0	28.0 [1]	15	12.07	5.72	2.592
Design M: Standard version													
M 127 SFK [2]	19.05	40	27.5	11.75	15.62	19.55	11.0	24.0	26.0	28.0	10	12.07	5.72	1.742
M 127 SFK	19.05	43	29.0	11.75	15.62	19.55	11.0	24.0	26.0 [1]	28.0	10	12.07	5.72	1.646
M 127 SFK	19.05	48	31.5	11.75	15.62	19.55	11.0	24.0	26.0	28.0	10	12.07	5.72	1.920
M 127 SFS [2]	19.05	40	27.5	11.75	15.62	19.55	11.0	24.0	26.0	28.0	15	12.07	5.72	2.688
M 127 SFS	19.05	43	29.0	11.75	15.62	19.55	11.0	24.0	26.0 [1]	28.0	15	12.07	5.72	2.688
M 127 SFS	19.05	48	31.5	11.75	15.62	19.55	11.0	24.0 [1]	26.0	28.0	15	12.07	5.72	2.880
M 1611 SFK [2]	25.4	65	44.9	17.02	25.45	32.0	16.5	38.5	–	–	25	15.88	8.28	4.104
M 1611 SFS [2]	25.4	65	44.9	17.02	25.45	32.0	16.5	38.5	–	–	30	15.88	8.28	6.552
D 1611 SFS [2]	25.4	99	76.9	17.02	25.45	63.4	16.5	38.5	–	–	30	15.88	8.28	11.584
Design LR: Double-pitch version													
LR 165 SFK [2]	25.4	30.7	20.0	7.75	11.30	14.65	7.5	24.0	–	–	6	8.52	4.45	0.792
LR 247 SFK	38.1	48	31.5	11.75	15.62	19.55	11.0	24.0	35	–	10	12.07	5.72	1.200
LR 247 SFS	38.1	48	31.5	11.75	15.62	19.55	11.0	24.0	35	–	15	12.07	5.72	2.016
LR 3211 SFK [2]	50.8	67.9	44.9	17.02	25.45	32.0	16.5	50.0	38.5	–	25	15.88	8.28	2.764
LR 3211 SFS [2]	50.8	67.9	44.9	17.02	25.45	32.0	16.5	50.0	38.5	–	30	15.88	8.28	5.236

[1] Supplied ex stock [2] Chains without light running rollers
SFK – with plastic conveyor rollers SFS – with hardened steel conveyor rollers

Connecting link

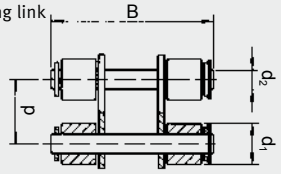

Design OS without of washers

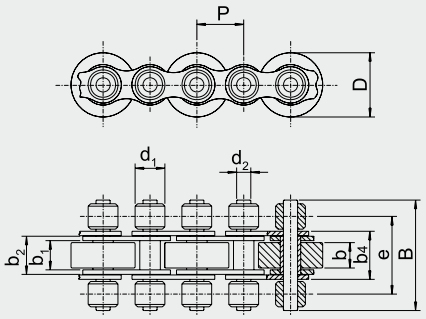

Design M normal pitch

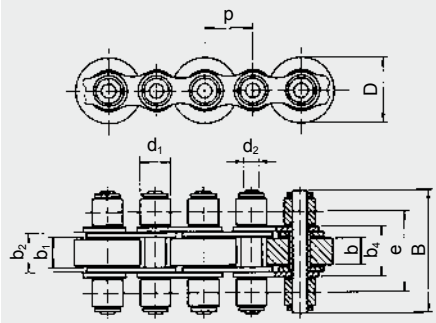

Design LR double-pitch

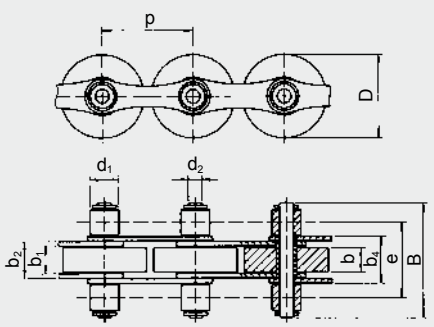

iwis Customer Service
Tel: +49 89 76909-1600 Fax: -1198 CallBack
sales-muenchen@iwis.com

iwis b.smart Accumulation Chains

Optimum transportation of conveyed goods

PROBLEM/INITIAL SITUATION

- Simple and reliable transport of a very wide range of workpieces and workpiece carriers
- Continuous conveying, accumulating, singling out and acceleration

KNOW-HOW MEETS EFFICIENCY

Put robust, durable **b.smart** accumulation chains to work for you – proven iwis quality at an attractive price!

Designed for cost-optimised conveyor technology applications – developed for optimum transportation of conveyed goods.

OPTIMUM RELUBRICATION

The service life of a chain depends on correct and adequate relubrication. After a certain time, which may vary according to operating conditions, the lubricant applied originally is eventually used up due to the oscillating motion of the chain bearing. Inadequate lubrication causes boundary friction, which in turn leads to fretting corrosion and increased chain wear. Selection of the correct lubricant and lubrication method are therefore a decisive factor in assuring that the relubrication process is effective.

iwis Accumulation Chains with finger and small parts protection

Absolutely safe

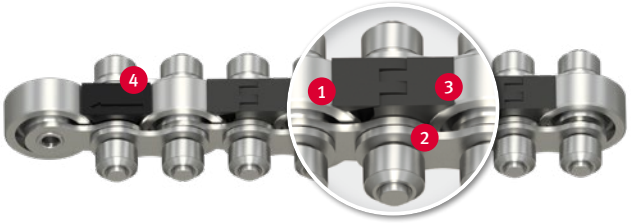

PROBLEM/INITIAL SITUATION

- Simple and reliable transport of a very wide range of workpieces and workpiece carriers
- Continuous conveying, accumulating, singling out and acceleration

OUR SOLUTION

Accumulation chains with finger and small parts protection feature optimum cover of the space between one transport roller and the next, preventing the ingress of small parts that could jam the rollers and/or chain link. In addition, the cover prevents the deliberate or accidental insertion of fingers while the conveyor is operating – an active contribution to accident prevention in line with increasingly strict industrial safety requirements.

SAFETY FOR OPERATORS & MACHINES

1. 100% cover of the space between transport rollers in accordance with required bend radii of the selected chain type
2. Firm mounting of plastic clip on inner link
3. No abrasive strain on conveyed goods, workpiece carriers or transport rollers
4. Two different finger protection versions – with and without joint

iwis Customer Service
CallBack Tel: +49 89 76909-1600 Fax: -1198
sales-muenchen@iwis.com

iwis antriebssysteme
wir bewegen die welt

iwis® Side Bow Accumulation Chains

Ideal for conveyor systems with extremely small curve radii

OUR SOLUTION

L 88 SF SB and M 120 SF-SB design – **the solution** for modular changes of direction in conveyor systems

HIGHLIGHTS

iwis Side bow accumulation chain with offset rollers 1: The modular solution for direction changes in conveyor systems with extremely tight bend radii **(› 350 mm).**

Optimum load distribution as transported material lies flat on links 2 even in bends, thus reducing chain wear.

Standard solution

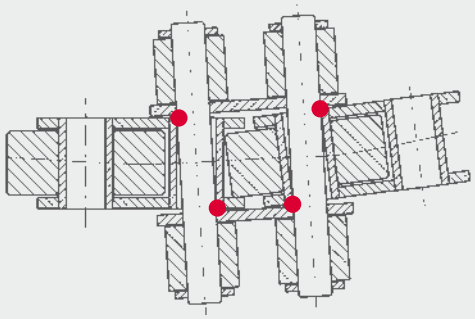

● Points of contact

Our solution

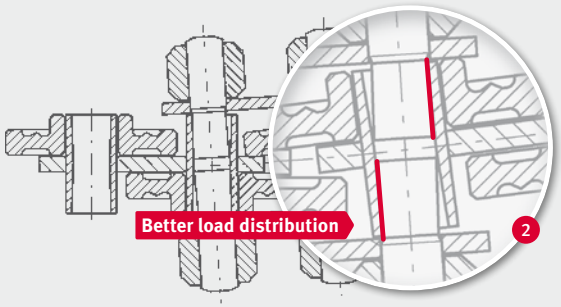

— Contact lines

iwis reference	Pitch p (mm)	Chain width B (mm)	Chain width b (mm)	Chain width b_4 (mm)	e (mm)	Transport roller Diameter D (mm)	Transport roller Loading capacity per roller (kg)	Weight (kg)
Side Bow Accumulation Chains								
L 88 SFS-SB	12.70	27	9.2	15.0	18.70	16.00	8	1.40
L 88 SFK-SB	12.70	27	9.2	15.0	18.70	16.00	8	1.40
M 120 SFK-SB	19.05	40	11.70	20.10	29.0	24.0 / 26.0 / 27.0 / 28.0	10	1.8
M 120 SFS-SB	19.05	40	11.70	20.10	29.0	24.0 / 26.0 / 27.0 / 28.0	15	2.8

Connecting link dimensions vary

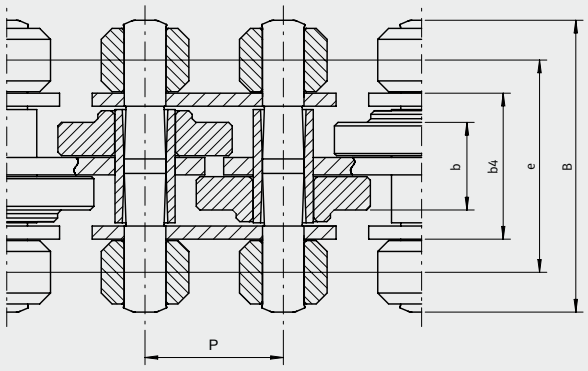

iwis Customer Service
Tel: +49 89 76909-1600 Fax: -1198 CallBack
sales-muenchen@iwis.com

iwis® Accumulation Chains

Important information

MAINTENANCE GUIDE FOR ACCUMULATION CHAINS

As for every roller chain, the „bearing points“ of the accumulation chain are also subject to natural wear. The correct tension, good guidance and effective relubrication are needed to reduce this and therefore increase the service life of the chain.

An accumulation chain works perfectly at up to 2% extension caused by wear with the provison that it is constantly retensioned. Approximately 5% of the actual chain tensioning force occurring can be used as a guide value for pretensioning.

Accumulation chains are given extremely effective initial lubrication in the works. The lubricant is used up in the course of time and effective and regular relubrication is necessary. During this process, care must be taken that the lubrication is undertaken at the correct points (= bearing points) and that the lubricant is able to creep.

INFORMATION ON THE DESIGN OF ACCUMULATION CHAINS

Important criteria when selecting an accumulation chain are:

- Loading on the transport rollers from the weight of the material being conveyed on them. The load-bearing strength per roller is stated in the tables. If the contact surface for the material being conveyed is uneven, it is necessary to estimate how many free rollers are actually load-bearing.
- Loading on the chain from tensile forces occurring in operation. The most important influencing dimensions are the weight of the material conveyed and the friction factors.The following tensile forces occur in accumulation chains:
  - from friction resistance between roller and chain pin
  - from friction resistance between transport rollers and chain bush when in accumulating operation
  - from roller resistance when rolling the runners on to the chain guides and when rolling the conveyed materials on to the transport rollers.

Rough determination of the chain tensioning force F per chain strand:

$$F = \frac{\mu \cdot 9.81 \cdot Q \cdot 1.4}{n} \text{ [N]}$$

μ = friction value 0.08-0.3 depending on:
- material pairing
  Steel/steel or plastic/steel
- Condition of the friction surfaces:
  dry or lubricated
- Degree of contamination of the friction surfaces

Q = Total weight conveyed [kg]
n = Number of chain strands

The formula is valid for even distribution of the weight loading over the chain strands. If the conveyed material is not in full contact because of unevenness, an estimate has to be made as to what percentage of the length in contact is actually effective. The tensile strength per chain strand is correspondingly higher.

MAX. CONVEYOR LENGTH

Depending on loading 25 – 30 m, parallel and exact guidance must be ensured.

AREA OF USE...

... of accumulation chains:

- In many areas of conveyor engineering
- Where there are links in processing and assembly lines
- In warehouse engineering
- In a wide range of material flow systems

... and everywhere where work-pieces, components for storage, pallets, containers, crates etc. have to be conveyed, accumulated, accelerated and singled out in a simple way.

RECOMMENDED WORKING LOAD

iwis chain	Recommended max. working load [N]
L 88 SF	1500
L 85 SF	2300
M 120 SF	2500
M 127 SF	4000
M 1611 SF	5000
D 1611 SF	10000

iwis Customer Service
CallBack Tel: +49 89 76909-1600 Fax: -1198
sales-muenchen@iwis.com

iwis antriebssysteme
wir bewegen die welt

iwis® Accumulation Chains
Accessories

CHAIN SPROCKETS FOR ACCUMULATION CHAINS

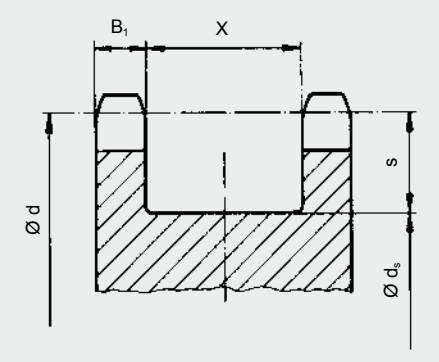

iwis reference	Pitch p (mm)	B_1 (mm)	X (mm)	s (mm)
L 88 SF	12.7	4	15.5	10
M 120 SF-B40	19.05	8.3	20,7	15.0
M 127 SF-B40/B43	19.05	8.3	20.7	15.0
M 120 SF-B45	19.05	10.8	20.7	15.0
M 127 SF-B48	19.05	10.8	20.7	15.0
M 1611 SF	25.4	11.6	33.3	20.5

$d_s = d - 2s$ $d = p : (\sin 180° : z)$ Recommended number of teeth minimum z = 15

CHAIN GUIDE/EXAMPLE

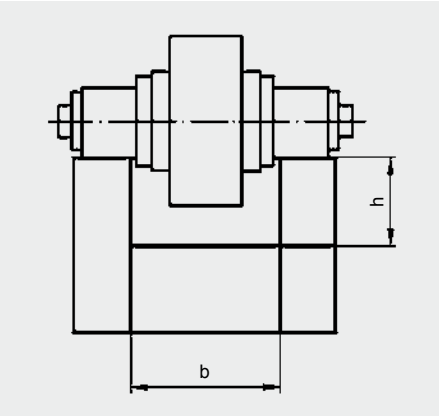

iwis chain	b (mm)	h (mm)
L 88 SF	15	10
L 88 SF SB	15.5	10
M 120 SF	20	15
M 120 SF SB	21	15
M 127 SF	20	15
M 1611 SF	33	20

TOOL

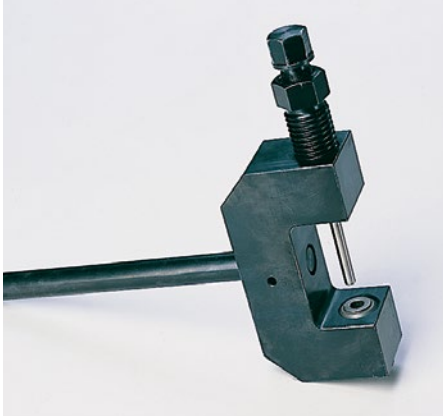

ARTICLE NO. 40000646

Tool for dismantling accumulation chain M 120 SF and M 127 SF with 3/4 inch pitch (available from stock)

CLEANING BRUSH FOR PROFILES

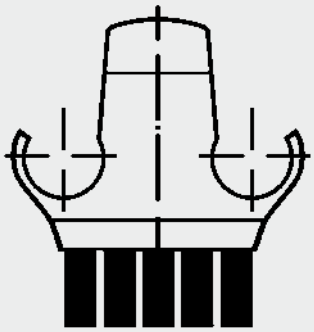

Profile cleaning brush

Multipurpose brush especially designed to clean conveying profile for most stringent conditions (for example: chips, welding drops, dust etc.). Brush only available for the new accumulation chain generation of L 88 SF and M 120 SF.

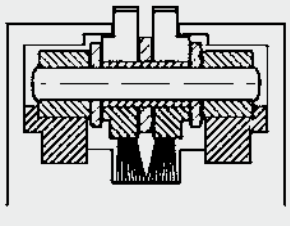

Application

Special Conveyor Chains

iwis offers an extensive program of special chains for various industrial applications and requirements. While the plate chain is being used wherever smooth and reliable conveying through very narrow bends is necessary, the transfer chains are utilized wherever gentle transportation is required. iwis grip chains are applied wherever plate and sheet type materials are drawn in or off, transported or positioned. Additional iwis special conveyor chains: tube and can transport chains (POC), pallet transporting chains, side bow chains, leaf chains, push pull chains and hollow pin chains.

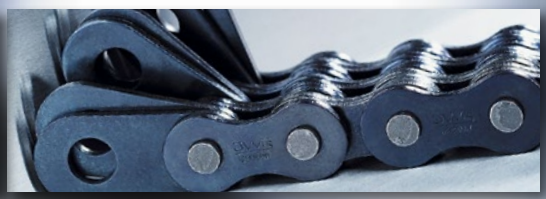

iwis Customer Service
Tel: +49 89 76909-1600 Fax: -1198 CallBack
sales-muenchen@iwis.com

iwis® Grip Chains

Safe infeeding, transportation and positioning of thin-walled, large-area soft foils and panels

PRODUCT RANGE

With 1 tip

With 2 tips

With flat clamps

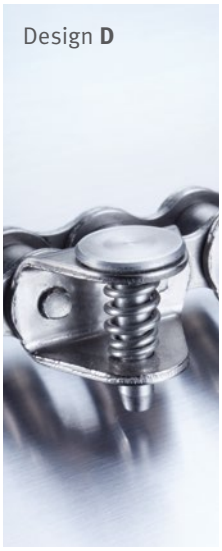

With button clamps

With clamp E

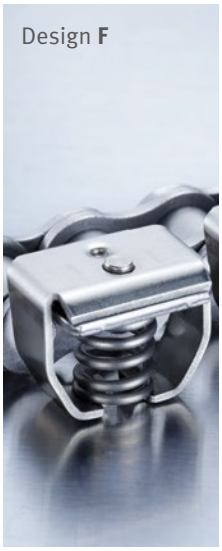

With clamp F

HIGHLIGHTS

- iwis high-performance chains with excellent wear resistance
- Minimal initial elongation due to optimum pre-stretching
- High rigidity also enables applications in long machines
- Basic chain versions are chemically nickel-plated / MEGAlife maintenance-free versions are available on request
- Identical chain lengths (within the selected tolerance range) ensure excellent running characteristics in both synchronous and parallel operation
- Differing levels of spring force allow an extremely wide range of materials to be gripped gently and held securely
- Chains with restricted length tolerances can be produced
- Recommended maximum running speed:
  ⇢ 2 m/s for the 1/2" grip chain
  ⇢ 1,2 m/s for the 5/8" grip chain
  Different control geometry is required for higher running speeds.
- iwis provides complete, ready-to-install solutions!

FLYER

See our product flyer for more information.

All chains can be supplied with a high-quality **food-grade** initial lubricant!

iwis Customer Service
CallBack Tel: +49 89 76909-1600 Fax: -1198
sales-muenchen@iwis.com

THE NEW IWIS GRIP CHAIN

For more technical details, see **p. 90**

CURRENT SOLUTION

- Not enough space to insert film
- Applying force only to individual points in the foil can cause the film to tear, which also results in increased noise.
- Foil deformation possible at the edge of the gripper element

OUR SOLUTION

- Accurate fitting of gripper in the groove
- Better retention force than the competition
- Retention force dependent on plastic film used
- Burled plate for optimized functional safety and hygiene
- More free space for better foil insertion
- Films are not twisted, no deformation at the edge of the gripper element
- Lower noise emissions
- Easier removal of foil scraps at the line outfeed

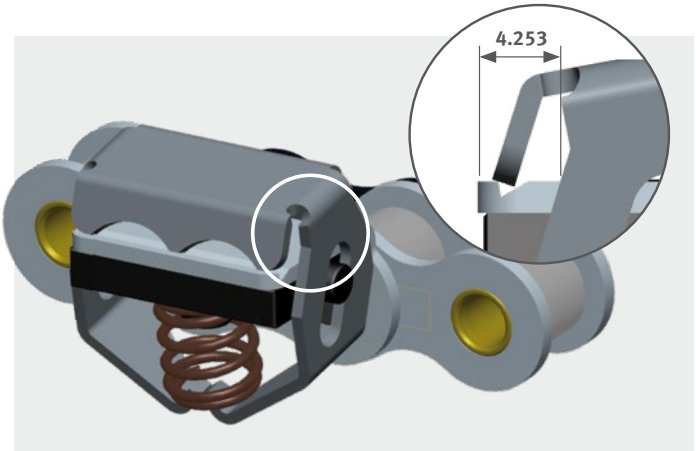

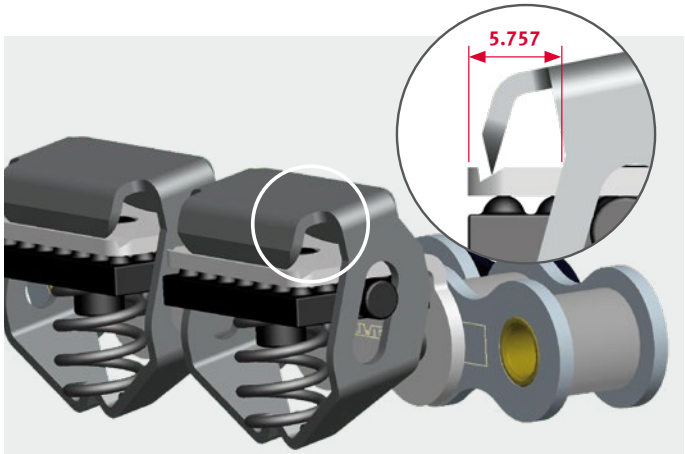

iwis Customer Service
Tel: +49 89 76909-1600 Fax: -1198 CallBack
sales-muenchen@iwis.com

iwis® Grip Chains

Safe infeeding, transportation and positioning of thin-walled, large-area soft foils and panels

"1-TIP" GRIP CHAINS

TECHNICAL FEATURES

- **Simplex and duplex chain** 1/2 x 5/16" acc. to ISO 606
- Gripper with 1 tip, special designs on request
- Retention force is dependent on material conveyed and spring design – different number of coils and wire spring diameters available
- The gripper opens when it runs against a control disc (e.g. sprocket hub), causing it to swivel away outwards
- Food-grade initial lubrication
- Sprocket designs on request

iwis reference	DIN ISO	Pitch p [mm]	Average foil retention force F* [N]	Spring	x	y	Article No.
L 85 Grip	08 B-1	12.7	10	0.7 x 6	5	6	50007495
L 85 Grip	08 B-1	12.7	24	0.9 x 5	4	5	50034722
D 85 Grip	08 B-2	12.7	10	0.7 x 6	5	6	50007033

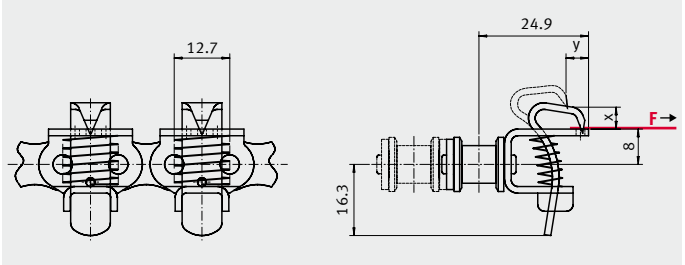

"2-TIP" GRIP CHAINS

TECHNICAL FEATURES

- **Simplex and duplex chain** 1/2 x 5/16" acc. to ISO 606
- Gripper with 2 tips, special designs on request
- Retention force is dependent on material conveyed and spring design – different number of coils and wire spring diameters available
- The gripper opens when it runs against a control disc (e.g. sprocket hub), causing it to swivel away outwards
- Higher retention force in comparison with 1-tip grip chain
- Food-grade initial lubrication
- Sprocket designs on request

iwis reference	DIN ISO	Pitch p [mm]	Average foil retention force F* [N]	x	y	Article No.
L 85 Grip	08 B-1	12.7	35	3.0	4.5	50024958

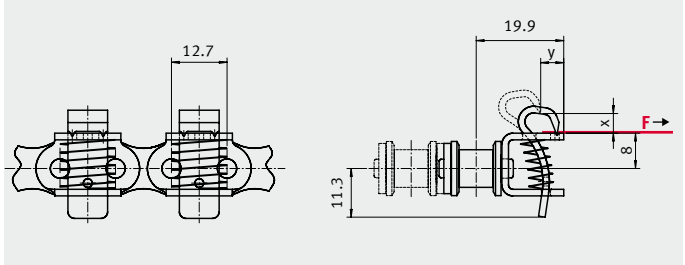

Dimensions x and y are dependent on the springs used. These are maximum values for the opening stroke.
A smaller opening stroke will increase life expectancy of the spring.
* Reference foils were used to determine the average foil gripping force (F).
Concrete values are dependent on the film used (material, surface, thickness). Deviations are possible.

iwis Customer Service
CallBack Tel: +49 89 76909-1600 Fax: -1198
sales-muenchen@iwis.com

"FLAT CLAMP" GRIP CHAINS

Design **C**

TECHNICAL FEATURES

- **Simplex and duplex chain** 1/2 x 5/16" acc. to ISO 606
- Gripper with flat clamping surface
- Retention force is dependent on material conveyed and spring design – different number of coils and wire spring diameters available
- The gripper opens when it runs against a control disc (e.g. sprocket hub), causing it to swivel away outwards
- Gentle handling of materials
- Low transmission forces
- Sprocket designs on request
- Can also be used for paper

iwis reference	DIN ISO	Pitch p [mm]	Average foil retention force F* [N]	Spring	x	y	Article No.
L 85 Grip	08 B-1	12.7	3	0.7 x 6	5	3.5	50037062
L 85 Grip	08 B-1	12.7	5	0.9 x 5	4	2.8	50035540
D 85 Grip	08 B-2	12.7	3	0.7 x 6	5	3.5	50032581

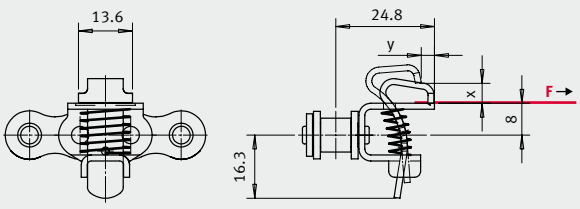

"BUTTON CLAMP" GRIP CHAINS

Design **D**

TECHNICAL FEATURES

- **Simplex chain** 1/2 x 5/16" or 5/8 x 3/8" acc. to ISO 606
- Rotationally symmetrical gripper element
- Extremely flat button clamp
- Retention force is dependent on material conveyed and spring design – different number of coils and wire spring diameters available
- **iwis patent** (spring without additional fixing elements)
- Does not swivel away outwards when opened
- Sprocket designs on request

iwis reference	DIN ISO	Pitch p [mm]	Average foil retention force F* [N]	e	Article No.
M 106 Grip	10 B-1	15.875	70	16.8	50034301
L 85 Grip	08 B-1	12.7	70	15.8	50035491

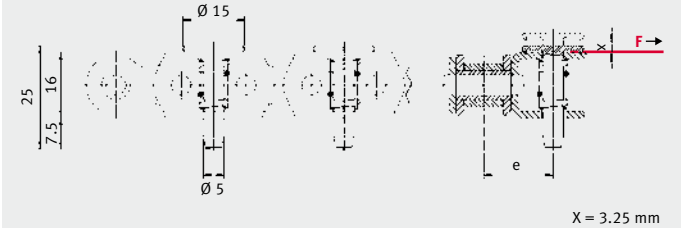

Dimensions x and y are dependent on the springs used. These are maximum values for the opening stroke.
A smaller opening stroke will increase life expectancy of the spring.
* Reference foils were used to determine the average foil gripping force (F).
Concrete values are dependent on the film used (material, surface, thickness). Deviations are possible.

iwis Customer Service
Tel: +49 89 76909-1600 Fax: -1198 CallBack
sales-muenchen@iwis.com

iwis® Grip Chains

Safe infeeding, transportation and positioning of thin-walled, large-area soft foils and panels

GRIP CHAIN WITH CLAMP E

TECHNICAL FEATURES

- Optimization of grip chain M106 with attachment 202.6 on one side and delivery as a complete solution with gripper system consisting of clamp, burled plate and spring
- Clamp and spring made of corrosion-resistant steel
- Chain is chemically nickel-plated
- Available with long-lasting lubrication or food-grade lubricant
- Alternative: M106 standard chain also available without attachments (Customers' own clamps can be fitted)
- Springs with optimised surface structure

iwis reference	ISO	Pitch p [mm]	Average foil retention force F* [N]	x	y	Article No.
M 106 Grip	10 B-1	15.875	85	4.9	6.1	50039260

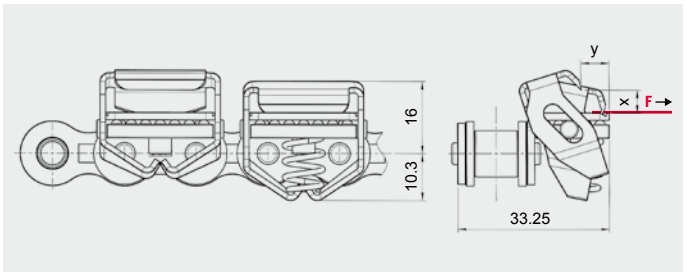

GRIP CHAIN WITH CLAMP F

TECHNICAL FEATURES

- **Single and duplex chain** 1/2 x 5/16" acc. to ISO 606
- Complete gripper element
- Gripper element with a continuous sharp-aged gripping flange
- Retention force is dependent on material conveyed
- Clamp and spring made of stainless steel spring steel
- Due to a special geometry of sprockets used, the gripper opens with a slight sideways movement
- Food-grade initial lubrication
- Sprocket designs on request

iwis reference	ISO	Pitch p [mm]	Average foil retention force F* [N]	Spring	x	y	Article No.
L 85 Grip	08 B-1	12.7	42	1.3 x 5.5	3	0.6	50045980

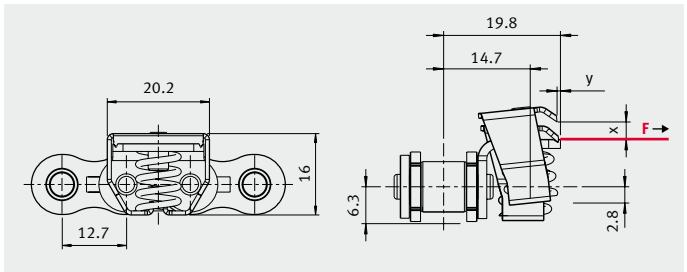

Dimensions x and y are dependent on the springs used. These are maximum values for the opening stroke.
A smaller opening stroke will increase life expectancy of the spring.
* Reference films were used to determine the average film gripping force (F).
Concrete values are dependent on the film used (material, surface, thickness). Deviations are possible.

iwis Customer Service
CallBack Tel: +49 89 76909-1600 Fax: -1198
sales-muenchen@iwis.com

iwis antriebssysteme
wir bewegen die welt

iwis® Tube Conveyor Chains

Gentle support and reliable transportation for thin-walled hollow bodies

PROBLEM/INITIAL SITUATION

Gentle support and reliable transportation for thin-walled hollow bodies through several processing stations (cleaning, painting, drying...).

OUR SOLUTION

iwis high-performance chains – roller chains with corrosion-resistant, easy to change attachments. **Exclusive to iwis.**

HIGHLIGHTS

- Transport bars can be changed easily on site using the special iwis tool provided; no need to break the chain or remove it from the machine
- Adapter and bars made of highly alloyed, corrosion-resistant steels with good elastic characteristics
- iwis standard roller chains with particular wear-resistant SL-pins are used, so longer service life in comparison with hollow pin chains
- Transport bars available in required lengths with 1 mm graduations
- Different shapes for bar ends avaiable – for example protection heads made of aluminium or plastic
- Freely selectable distance between the bars
- Basic chains also available in maintenance-free version (MEGAlife)
- 1/2", 5/8" und 3/4" also available in curved side design (only ANSI)

TECHNICAL FEATURES

- The bars are pinched on to the extended pins of the base chain using an adapter and secured by fins to prevent twisting
- The bar can be changed quickly and easily if repairs are necessary by breaking open the adapter with the iwis special tool (see illustration)

Suitable tool for mounting and removal can be supplied.

AREAS OF APPLICATION

- Everywhere where tubes and other thin-walled hollow bodies (cans) are transported, cleaned, painted, dried...

Inquiry form tube conveyor chains:
www.iwis.de/
tube-conveyor-chains-inquiry

ISO	iwis reference	Pitch p (mm)	L max. (mm)	D_1 (mm)	m (mm)	D_2 (mm)	D_3 (mm)
08B-1	L 85 SL	12.7	300	8.0	22.0	4.0	8.0
10B-1	M 106 SL	15.875	300	8.0	22.0	4.0	8.0
12B-1	M 127 SL	19.05	300	8.0	22.0	4.0	8.0
12 A-1 ANSI 60	M 128 ASL	19.05	300	8.0	22.0	4.0	8.0

Please state the length L in any enquiry or order.

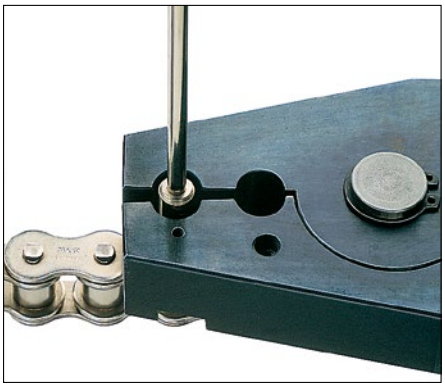

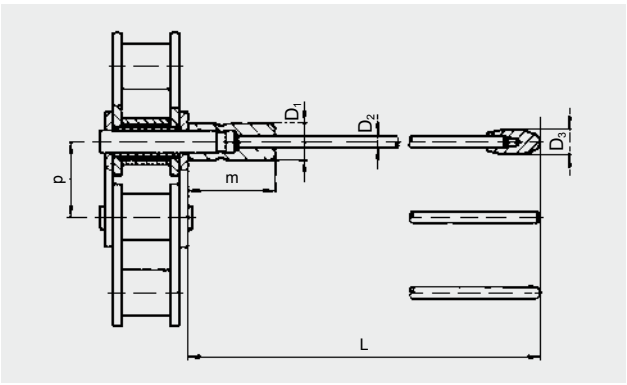

iwis Customer Service
Tel: +49 89 76909-1600 Fax: -1198 CallBack
sales-muenchen@iwis.com

iwis® Pin Oven Chains

The reliable and safe transport of cans

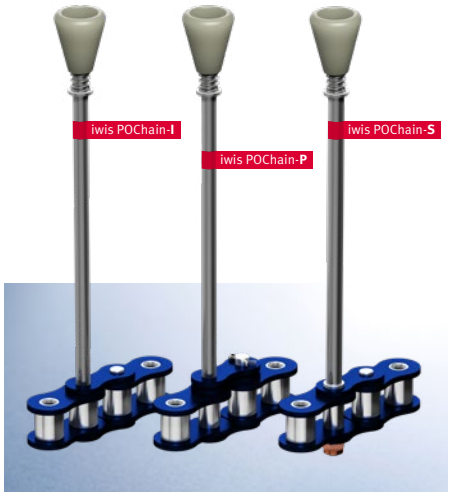

PROBLEM/INITIAL SITUATION

The reliable and safe transport of cans or other thin-walled hollow bodies at high speeds and temperatures.

OUR SOLUTION

iwis high-performance chains are extremely wear-resistant with specially adjusted transport pins and superior protective heads – the right solution for every 2-part can handling application!

HIGHLIGHTS

- iwis precision roller chains are long-lasting, reliable and particularly wear resistant.
- iwis Pin Oven Chains for can manufacturing applications are initially treated with our special lubricant IPP. IPP is PWIS-free, drip-proof, has a very low evaporation rate, is suitable for high-temperature operation and approved for use in the food industry.
- **Standard protective head:** high-performance material (PEEK), outstandingly heat-resistant (up to at least 260 °C, depending on application). PEEK is also highly resistant to chemicals.
  Protective heads are also optionally available with sliding washers, if necessary (only recommended for applications where contamination is uncritical).
- Length of transport pins can be adapted to your specifications.
- Transport pins: easy to change on the production line without breaking the chain or removing it from the machine (POChain P/-S)
- Transport pins can be installed at defined intervals (e.g. every 7th pin).
- iwis offers three fixture options for transport pins:
  – POChain-**I**: pins are integrated in the outer chain plates
  – POChain-**P**: split-pin fixture
  – POChain-**S**: pins are secured with special nuts
- Temperature range: 0 °C to +260 °C

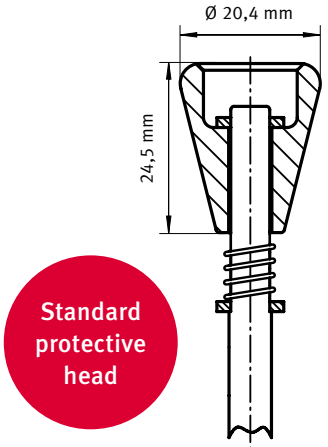

AREAS OF APPLICATION

- Everywhere where cans or other thin-walled hollow bodies are transported, painted, dried...

Inquiry form POChain:
www.iwis.de/**POChain-inquiry**

TWO PIN VERSIONS

Bendable pin: These pins are manufactured to be tough yet bendable enough to withstand inadvertent impact during conveyor jams or accidental contact with the machine frame. These pins are easy to bend back into their original position by hand.

SnapOff pin: The material specification of these pins cause them to break off in the event of any accidental contact or impact during operation. The advantage for you: the hardness of the transport pin material is similar to that of the pins of the base chain, so the wear rate of both sets of pins is the same.

OUR FIXTURE SOLUTIONS

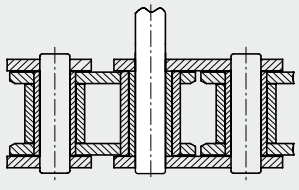
iwis POChain-**I**

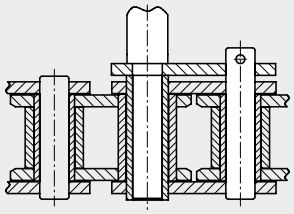
iwis POChain-**P**

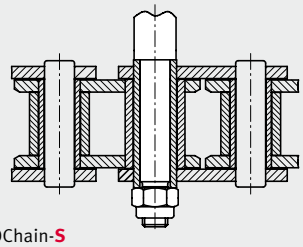
iwis POChain-**S**

iwis Customer Service
CallBack Tel: +49 89 76909-1600 Fax: -1198
sales-muenchen@iwis.com

Chain type	ISO	iwis designation	Pitch × inner width p × b1	Breaking load min. F_B min. (N)	Roller Ø d_1 max. (mm)	Hollow pin inner Ø min. D (mm)	Inner width b_1 min. (mm)	Pin length b_4 (mm)	Transport pin Ø T (mm)	Weight (dependent on transport pin lengths)
POChain-**I**	12 A-1/ANSI 60	M 128A SL	3/4 × 1/2“	31,300	11.91	–	12.7	26.3	5.97	approx. 1.9 kg/m
POChain-**P**	12 A-1/ANSI 60	M 128A SL	3/4 × 1/2“	31,300	11.91	6.0	12.7	26.7	5.97	approx. 1.9 kg/m
POChain-**S**	12 A-1/ANSI 60	M 128A SL	3/4 × 1/2“	31,300	11.91	6.0	12.7	26.7	8.00	approx. 2.3 kg/m

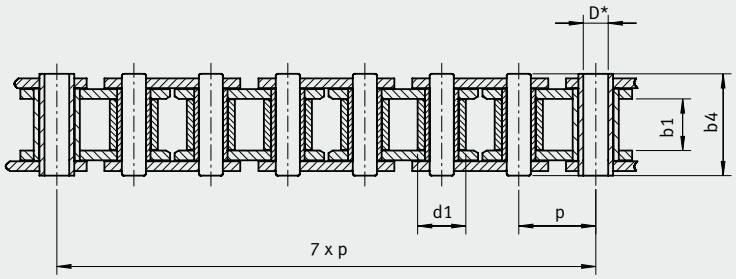

*Notice: Dimensions only apply to POChain-P/S. K defines the dimension from outer plate to the end of the protective head.

HIGHLIGHTS IWIS ELASTIC CAN TIP (ECT)

- Less complex design: one high-temperature elastomeric head replaces one PEEK protective head, three washers and a spring!
- The design and material properties of the elastomeric head take over the damping properties of a spring.
- Defective heads can be replaced easily and without tools.
- Even defective heads still have emergency running capabilities.
- ECT material is PWIS-free and FDA approved!
- Will not damage thin-walled drinks cans.
- Suitable for temperatures up to 215 °C. Available now!

New iwis head solutions
for your special requirements:
innovative and patented

NOMENCLATURE

Our precise nomenclature makes ordering easier for you. The detailed designation code helps you to find and order exactly the right chain for your application quickly and without any trouble – in writing, by phone or via our online request form.

www.iwis.de/**POChain-inquiry**

1 2 3 4 5 6 7 8

60-M128A-ST-I-7-7.060-SO-P-S-322L-POChain

1. **[ST]** Standard with IPP lubricant
2. **[I]** Integral **[P]** Push-fit **[S]** Threaded
3. Pin interval (every 7th pin)
4. Pin length dimension K (4-digit in inches 4-digit in mm)
5. **[SO]** SnapOff pin **[BE]** Bendable pin
6. **[P]** PEEK **[E]** Elastomeric standard ECT **[ES]** Customized elastomeric ECT
7. **[S]** without loose-fit spacer **[W]** with loose-fit spacer
8. Individual chain length (links)

iwis Customer Service
Tel: +49 89 76909-1600 Fax: -1198 CallBack
sales-muenchen@iwis.com

JWIS® Push Pull Chains

Compact, flexible, strong!

PROBLEM/INITIAL SITUATION

- Restricted installation space
- Absorption and/or transmission of pressure forces in and perpendicular to running direction
- Deflection of pressure forces from any direction

OUR SOLUTION

The compact design of iwis push pull chains makes them ideal for the transmission of both compressive and tensile forces – even without chain guides. Chain engineering for the tightest spaces.

HIGHLIGHTS

- Push pull chains are only flexible in one direction
- Compact design for maximum functionality
- Suitable for pushing loads and bridging gaps without chain guides
- Conversion of translational tensile and compressive forces into rotational motion and vice versa
- Variety of material specifications can be supplied
- JWIS endpieces are the interface between push pull chain and traction/ propulsion element; they create the chain pre-tensioning required.
  – Easy fitting with standard components
  – Individual interface available on request
- Stainless steel versions also available.

ROTATIONAL, TRANSLATIONAL

- Push pull chains can perform the same functions as linear drives, so an endless, continuous chain drive is often no longer necessary.
- The side-bow and back-bend capabilities of push pull chains can be individually customised, which offers a wide range of versatile solutions.
- An added bonus of these chains is their extremely compact design, resulting in space savings of up to 60% – a significant cost factor.

APPLICATIONS

- General mechanical engineering
- Medical technology
- Automotive engineering
- Conveyor systems
- Building services engineering
- Machine tools
- Ergonomic workplace design and furniture

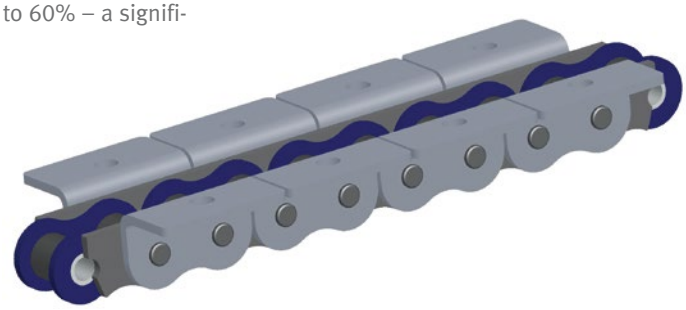

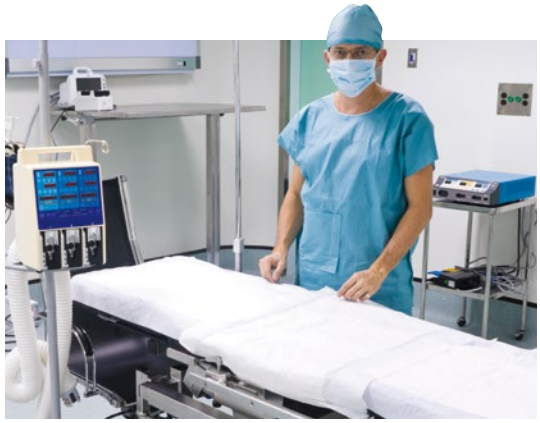

iwis Customer Service
CallBack Tel: +49 89 76909-1600 Fax: -1198
sales-muenchen@iwis.com

iwis reference	Pitch p (mm)	Roller diameter da max (mm)	Width between inner plates b1 min (mm)	Pin diameter d2 max (mm)	Pin length L max (mm)	Pin length Lc max (mm)	Plate dimension H (mm)	Plate dimension h (mm)	Plate dimension t/T max (mm)	Max. compressive force [2] FD max (kN)	Min. tensile strength F_U (kN)	Weight q (kg/m)
Push Pull Chains												
G52 RS [1]	8.00	5.00	3.16	2.31	10.1	11.2	7.1	3.6	0.8	0.9	6.0	0.27
G67 RS [1]	9.525	6.35	5.72	3.31	15.7	16.9	8.2	4.1	1.2	1.8	10.5	0.55
08AF6	12.70	7.92	7.90	3.98	17.2	19.2	17.1	11.0	1.5	3.5	13.8	1.02
415BF4	12.70	7.75	4.88	4.09	16.4	17.8	17.0	11.0	1.3/3.1	3.0	12.0	1.07
08BSSF26	12.70	8.51	7.75	4.45	16.7	18.2	16.5	10.5	1.6	3.6	12.0	1.06
L85 RS [1]	12.70	8.51	7.75	4.45	19.8	21.4	11.8	5.9	1.7/1.5	3.8	22.0	0.93
M106 RS [1]	15.875	10.16	9.65	5.08	22.8	24.2	14.4	7.2	1.7/1.6	5.7	27.0	1.56
M128 ARS	19.05	11.91	12.60	5.96	30.0	31.4	18.0	9.0	2.4	10.2	42.0	1.96
M1610 ARS	25.40	15.88	15.88	7.92	39.0	40.9	23.0	11.5	3.2/3.0	18.5	68.0	3.56

[1] The inner link dimensions of our push pull chains correspond to ISO 606. Smallest sprocket: 10 teeth.
[2] Max. compressive force dependent on chain length and drive parameters.

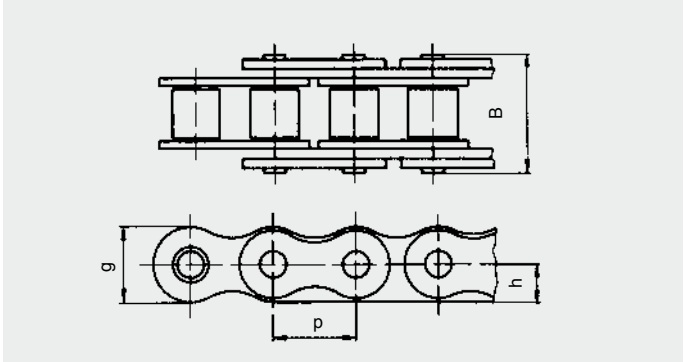

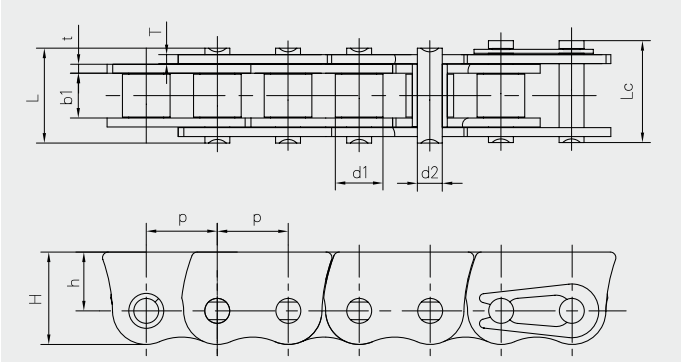

iwis Customer Service
Tel: +49 89 76909-1600 Fax: -1198 CallBack
sales-muenchen@iwis.com

JWIS® Plate Chains

For really tight bends

PROBLEM/INITIAL SITUATION

Ensuring the reliable, smooth conveying and storage of workpieces and workpiece carriers on narrow serpentine tracks.

OUR SOLUTION

JWIS brand plate chains with special plates pressed directly onto the chain pins guarantee an absolutely flat, step-free transport track in the tightest of spaces.

HIGHLIGHTS

- The iwis plate chain program includes roller chains according to standard ISO 606, ISO 1275 as well as works standard
- Guarantees an absolutely flat, step-free transport track
- Low noise emission
- Wide variety of different plate shapes allows individualised conveyor system design
- Various alternative plate materials available
- Effective protection of functional areas of the chain
- Intermeshing design of plates provides a continuous flat surface for workpiece transport
- Special plate shape allows the construction of very tight be
- Long conveying distances possible in very small spaces
- No risk of injury
- DIN sprockets may be used
- CAD data of all plate chain types available

AREAS OF APPLICATION

- Conveyor technology
- Beverage industry
- Automotive industry
- General engineering
- Packaging and food industry
- Medical technology and pharmaceutical industry
- Machine-to-machine linking and automation
- Storage and buffer systems
- Tool transport
- Under-floor conveyors

SOME EXAMPLES OF DIFFERENT PLATE CHAIN VERSIONS

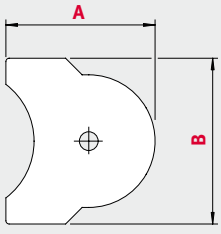

M127/LR247 Vers. 1

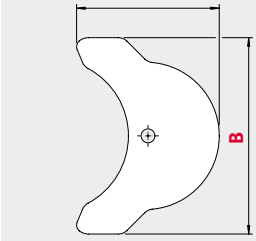

M127/LR247 Vers. 2

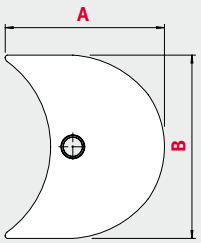

M1611

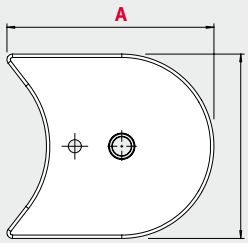

LR4810

HIGHLIGHTS

1. Wide variety of different plate shapes allows individualised conveyor system design
2. Various alternative plate materials available

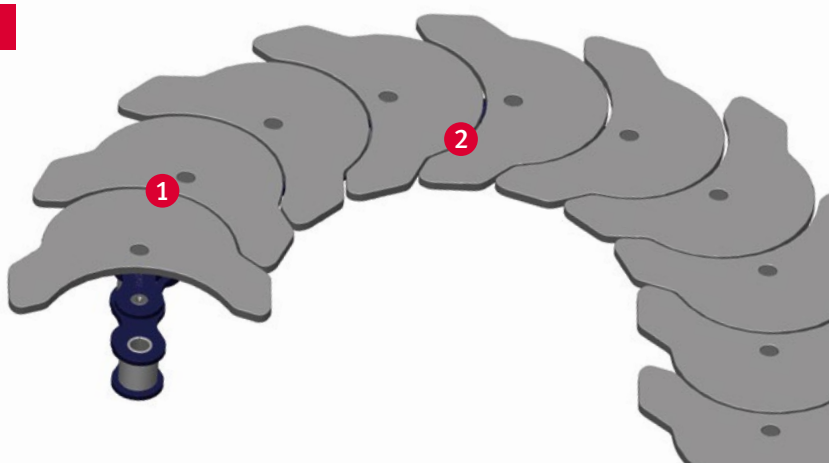

iwis Customer Service
CallBack Tel: +49 89 76909-1600 Fax: -1198
sales-muenchen@iwis.com

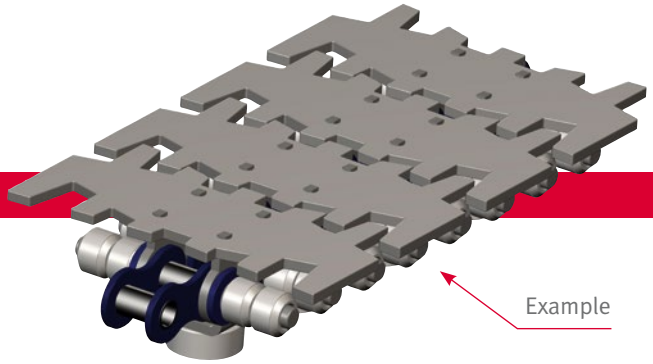

KNOW-HOW/ENGINEERING

If required, iwis will design customer-specific solutions for conveyor systems. Our design engineers will provide support with the configuration, calculation and construction of new conveyors.

Contact us for more details!

ISO	iwis reference	P (mm)	s (mm)	A (mm)	B (mm)	Min. radius R (mm)	Min. no. of teeth per sprocket	a (mm)	a1 (mm)	m (mm)	Basic chain
12 B-1	M127 Vers. 1	19.05	3.5	45	50	64	21	24.8	26.25	23.3	standard
12 B-1	M127 Vers. 2	19.05	3.5	59.25	80	152	50	24.8	26.25	23.3	standard
16 B-1	M1611	25.4	3.5	69.5	80	90	22	37.4	39.9	35.4	standard
212 B-1	LR247 Vers. 1	38.1	3.5	45	50	62	10	–	26.35	23.05	cranked
212 B-1	LR247 Vers. 2	38.1	3.5	59.25	80	152	25	–	26.35	23.21	cranked
–	LR4810	76.2	3	92.6	82.5	147	12	34.0	35.9	31.12	standard

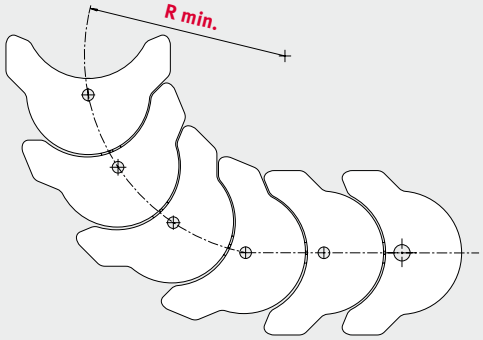

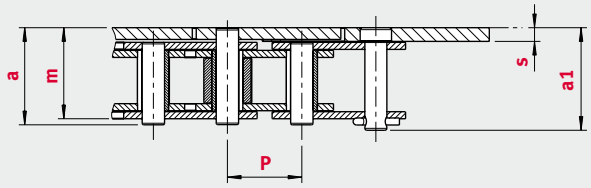

M127 Vers. 1 & Vers. 2 / M1611 (standard)

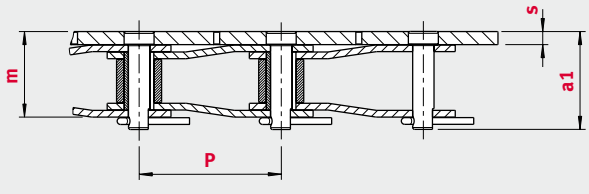

LR247 Vers. 1 & Vers. 2 (cranked)

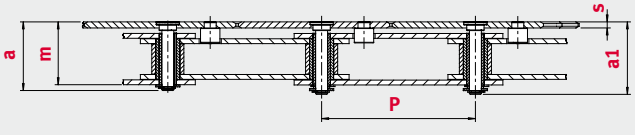

LR4810 (standard)

iwis Customer Service
Tel: +49 89 76909-1600 Fax: -1198 CallBack
sales-muenchen@iwis.com

iwis® Transfer Chains according to ISO 606

Conveying, transporting, stop-start conveying of single parts, pallets...

PROBLEM/INITIAL SITUATION

Open conveyor systems are susceptible to contamination by foreign bodies or small parts, which can cause belt malfunction or damage the goods.

OUR SOLUTION

Fully enclosed transfer chains (= TF) with wear-resistant, rugged snap-on plastic attachments prevent malfunctions caused byforeign bodies etc.
Exclusive to iwis.

HIGHLIGHTS

- All-round protection of functional components of the chain: attachments enclose the chain on three sides, even in the vicinity of sprockets
- Variety of base chains available e.g. **MEGAlife**, nickel-plated or corrosion-proof
- Gentle handling of delicate goods
- Close-fitting covers prevent the risk of injuries and malfunctions
- Outside of the chain is absolutely clean, so there is no accumulation of dust
- Drive chain always remains clean, even under adverse operating conditions
- Suitable for horizontal and vertical installation
- No lifting of the load in the vicinity of the sprockets

TECHNICAL CHARACTERISTICS

Chain configuration
Depending on conveyor situation, friction coefficients of 0.1 to 0.3 are assumed for determination of the required chain tensile force. The friction coefficients refer to the contact between chain and chain guide. Base chain calculation is performed according to the examples set out in the iwis Chain Engineering Handbook or via the iwis chain calculation programme available on our website.

Important: TF roller chains are not riveted!

You can rely on iwis for help and support in case you have enquiries about details of chain design or CAD data. Please contact us if you need help.

AREAS OF APPLICATION

- General mechanical engineering
- Conveyor and warehouse technology
- Packaging and food industry
- Electronic components and PCB production
- Electrical goods and household appliances
- Medical devices and pharmaceuticals
- Wood, glass and pottery processing
- Chemicals and process engineering
- Printing and paper industry.

... and in all other applications that call for gentle handling.

The chain is particularly suitable for machine-processed parts – even items with sensitive surfaces.

DIN ISO No.	iwis designation	Standard chain	Pitch p (mm)	Mean breaking load iwis F_B (N)	Inner width inner link b1 (mm)	Roller ø d1 (mm)	Width B (mm)	Attachment: Height H (mm)	Attachment: Height above centre of pin h (mm)	Attachment: Max. load per attachment F (N)	Max. permitted surface pressure vertical (N/mm²)	Chain weight (kg/m)	Max. pull-off force acc. to iwis test (N)
08 B-1	L85 TF	L85 SL	12.7	22,000	7.75	8.51	19.85	15.5	8.1	137	0.45	0.84	200
10 B-1	M106 TF	M106 SL	15.875	27,000	9.65	10.16	25.0	17.6	9.7	195	0.45	1.18	300
12 B-1	M127 TF	M127 SL	19.05	32,700	11.75	12.07	29.8	19.9	11.3	265	0.45	1.59	620

*The suffix SL (Super Longlife) denotes base chains with especially wear-resistant pins

vertical ↓

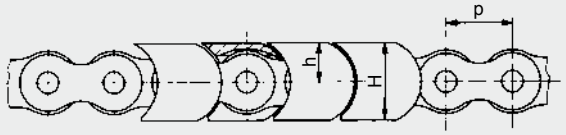

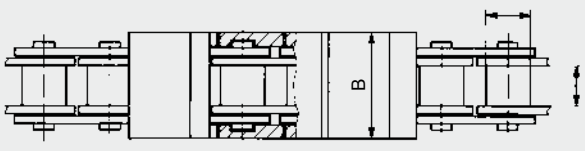

ATTACHMENT CHARACTERISTICS

iwis offers three attachment versions. The basic assumption for all temperature specifications is a max. surface pressure of 0.45 MPa; significantly higher temperature ranges are possible if surface pressure is lower. Please contact iwis in advance for advice. Different material configurations are possible for special applications e.g. with gradients, accumulation or aggressive media. In these cases, please contact iwis for an individual advisory consultation.

1. Standard applications

Colour:	white
Water absorption ASTM D570:	0.22%
Rockwell hardness M-scale ASTM D785:	80
Surface resistance ASTM D257:	› 1.0E + 15Ω
Max. temperature short-term:	140 °C
Max. temperature constant:	100 °C
Min. temperature:	-50 °C

2. Heat-resistant applications

Colour:	white
Water absorption ISO 62 in normal climate:	0.25%
Ball indentation hardness ISO 2039-1:	130 MPa
Surface resistance IEC 60093:	› 1.0E + 15Ω
Max. temperature short-term:	150 °C
Max. temperature constant:	140 °C
Min. temperature:	-50 °C

3. Antistatic applications

Colour:	white
Water absorption ISO 62 in normal climate:	9%
Surface resistance IEC 60093:	6.8E + 12Ω
Max. temperature short-term:	130 °C
Max. temperature constant:	90 °C
Min. temperature:	-40 °C

MATERIAL APPROVAL

Material	Standard	High-temperature	Antistatic
FDA approval [1]	✓	✓	✗
Silicone-free [2]	✓	✓	✓
PWIS-free [2]	✓	—*	—*
RoHS compliance	✓	✓	—*
REACH compliance	✓	—*	✓

[1] For contact with foodstuffs [2] Paint-wetting impairment substances
*Detailed information on PWIS, RoHS and REACH is available from your iwis contact.

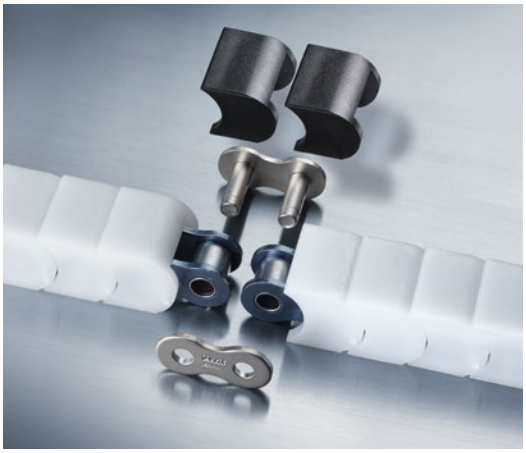

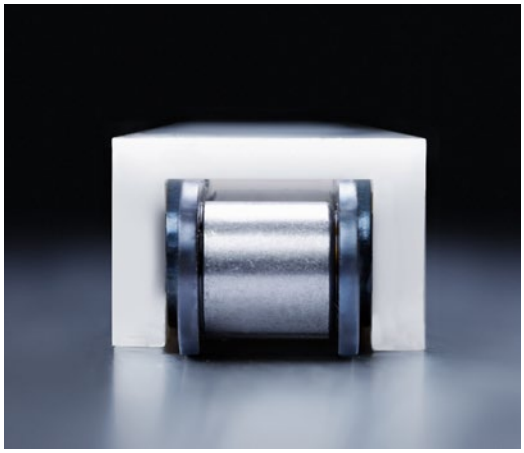

iwis Customer Service
Tel: +49 89 76909-1600 Fax: -1198 CallBack
sales-muenchen@iwis.com

JWIS® Transfer Chains according to ISO 606

Conveying, transporting, stop-start conveying of single parts, pallets...

CHAIN GUIDES

For iwis transfer chains installed horizontally, we recommend T-shaped chain guides to support the chain rollers. T-shaped chain guides are not required for vertical chain installation.

iwis designation	B_1 (mm)	b (mm)	h (mm)	H_1 (mm)
08B-1	20	7.5	3.1	15.6
10B-1	25	9.5	3.5	17.7
12B-1	30	11.3	3.9	20.1

Vertical

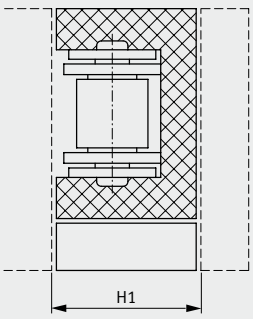

Horizontal

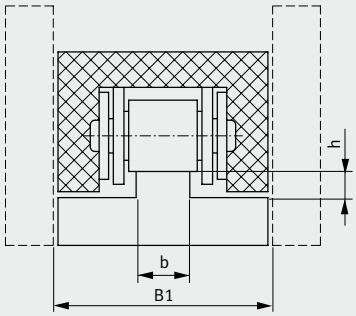

CONNECTING LINK

The chain ends are connected by a two-pin outer link block ❶ and a push-fit side plate ❷ pressed onto the pins. By bending the chain appropriately, the two attachments ❸ can be clipped on over the pin. A locking spring is not required. The two relevant attachments are coloured black for easy location of the connecting link.

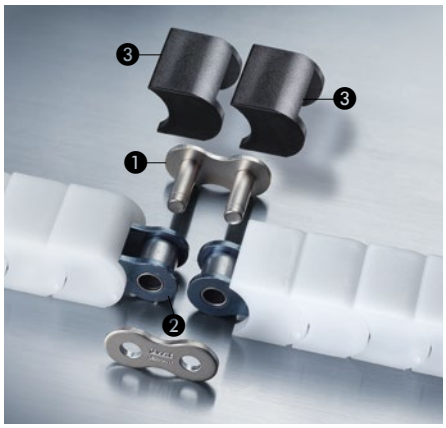

Connecting link: Same dimensions as chain

CORROSION RESISTANCE

Corrosion-proof CR chains, nickel-plated chains or low-maintenance **MEGAlife chains** with maximum service life can also be used as base chains for transfer chains. For more information on these chains, please refer to the catalogue “JWIS Precision chain systems for drive and conveyor purposes”.

LUBRICATION

Selecting the right lubricant and the appropriate lubrication method guarantees minimisation of chain wear, adequate cor¬rosion protection and optimum damping performance. Depending on the required application, the base chain can be treated with one of the iwis initial lubricants. For an overview of lubricants, please refer to the catalogue “JWIS Precision chain systems for drive and conveyor purposes”.

SPROCKETS

Standard sprockets compliant with DIN 8187 can be used for TF chains. In the case of sprockets where z › 18, the TF chain is also completely enclosed in the vicinity of the sprockets and the drive chain is protected against the ingress of foreign bodies.

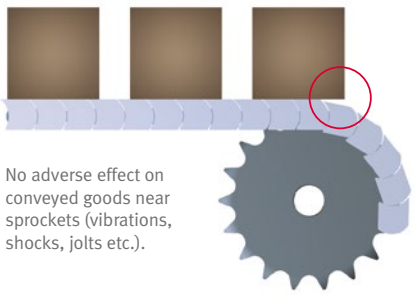

No adverse effect on conveyed goods near sprockets (vibrations, shocks, jolts etc.).

iwis Customer Service
CallBack Tel: +49 89 76909-1600 Fax: -1198
sales-muenchen@iwis.com

iwis antriebssysteme
wir bewegen die welt

iwis® Hollow Pin Chain

Simple fixing of attachments and transverse struts

iwis reference	Pitch p (mm)	g (mm)	B (mm)	D (mm)	Tensile strength F_B (N)	Weight (kg/m)
M 128 HB	19.05	18.0	25.5	6	36,500 [1]	1.23

[1] Breaking strength without pins inserted 34,500 N

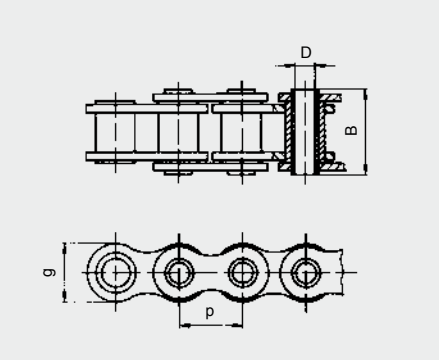

Special bush chain in accordance with roller chain 3/4 x 1/2 inch to ISO 606. Hollow pins can be arranged at any desired interval.

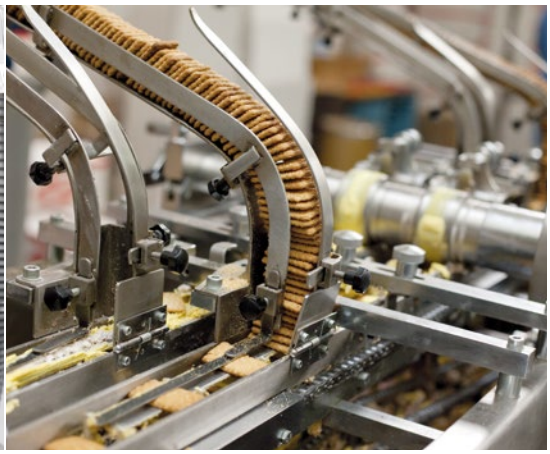

iwis Customer Service
Tel: +49 89 76909-1600 Fax: -1198 CallBack
sales-muenchen@iwis.com

iwis® Pallet Transporting Chains

HIGHLIGHTS

- Material to be transported can be positioned throughout because of the straight side plates
- Roller chains with straight side plates for transporting a wide range of material
- Also available in MEGAlife version

iwis reference	Pitch p (mm)	g (mm)	Ave. tensile strength F_B (N)	Weigth q (kg/m)
Single strand chain M 128 AG	19.05	18.0	42,000	1.75
Double strand chain D 128 AG	19.05	18.0	84,000	3.50

Dimensions and figures not stated correspond to those for iwis chains M 128 A SL or D 128 A to ISO 606, ANSI Standard.

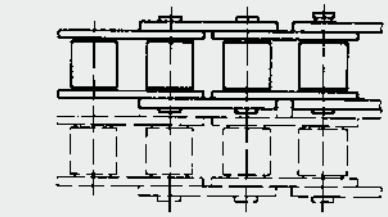

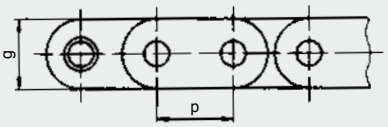

iwis® Side Bow Chains

Transporting, conveying, pulling on curved shape tracks

PROBLEM/INITIAL SITUATION

- Transporting and conveying on curved shape tracks
- Chains twisting when the shafts are at an angle to each other
- Change in the position of the material being transported e.g. from the horizontal to the vertical

OUR SOLUTION

iwis high-performance chains with specially designed chain link.
Exclusive to iwis.

HIGHLIGHTS

- Instead of being in contact with the line, the chain link is in overall contact throughout the curved area.
- Very narrow radii of curvature are possible because of symmetrical, tapered pins
- By using iwis straight and bent side plates suitable for universal use as conveyor chains

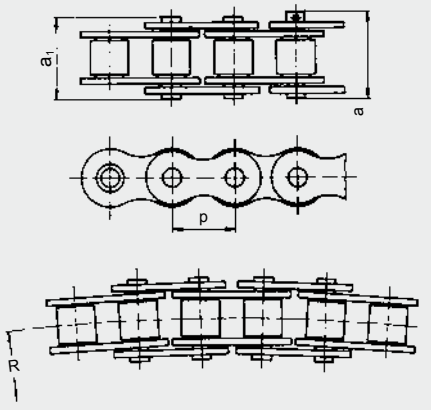

iwis reference	Pitch p (mm)	Outer width a1 (mm)	Outer width a (mm)	Min. radius R (mm)	Tensile strength F_B (N)	Max. permissible chain pull power Continuous (N)	Max. permissible chain pull power Transient (N)	Weight (kg/m)	Connecting links available
L 85 A-SB	12.7	16.8	17.8	425	10,000	600	1,500	0.65	2, 4, 8
M 106 A-SB	15.875	21.0	22.3	500	18,000	900	2,500	1.00	2, 4, 8
M 128 A-SB	19.05	26.3	27.7	750	26,000	1200	3,700	1.50	2, 4, 8

Dimensions and values not stated here correspond to iwis chains L 85 A, M 106 A and M 128 A SL.

iwis Customer Service
CallBack Tel: +49 89 76909-1600 Fax: -1198
sales-muenchen@iwis.com

iwis® Leaf Chains

iwis reference	Pitch p (inch)	Pitch p (mm)	Length over 100 x pitch (mm)	Plate combination	Arrangement	Min. iwis tensile strength F_U (N)*	Bearing area f (cm²)	Weight q (kg/m)	Bearing pin diameter d_2 (mm)	Overall width a_1 (mm)	Overall width a (mm)	Plate height g_1 (mm)	Plate thickness s (mm)	End link dimensions d_3 (mm)	d_4 (mm)	g_2 (mm)	g_3 (mm)	u_1 (mm)	u_2 (mm)	u_3 (mm)	u_4 (mm)
Leaf chains																					
FL 522	–	8.0	800.0	2 x 2		5,000	0.05	0.15	2.31	5.6	–	6.3	1.0	6.2	–	16.0	–	15.0	10.0	–	–
FL 523	–	8.0	800.0	2 x 3		7,000	0.05	0.19	2.31	6.7	–	6.3	1.0	6.2	–	16.0	–	15.0	10.0	–	–
FL 623 [1]	3/8	9.525	945.0	2 x 3		10,000	0.08	0.32	3.31	8.3	–	8.1	1.2	6.2	–	16.0	–	15.0	10.0	–	–
FL 623 b [1]	3/8	9.525	944.0	2 x 3		20,000	0.20	0.46	3.31	10.9	–	8.2	2.0	6.2	–	–	–	–	–	–	–
FL 823 b	1/2	12.70	1268.0	2 x 3		28,000	0.18	0.65	4.45	12.4	–	10.8	2.0	8.2	–	18.0	–	20.0	11.0	–	–
FL 834 a	1/2	12.70	1268.0	3 x 4		21,000	0.17	0.42	3.68	13.1	–	9.1	1.5	8.2	–	18.0	–	20.0	11.0	–	–
FL 834 b	1/2	12.70	1268.0	3 x 4		42,000	0.27	0.91	4.45	16.5	–	10.8	2.0	8.2	–	18.0	–	20.0	11.0	–	–
FL 845 a	1/2	12.70	1268.0	4 x 5		34,000	0.24	0.67	3.68	16.9	25	9.1	1.6	8.2	12.2	18.0	25.0	20.0	11.0	30.0	15.0
FL 845 b	1/2	12.70	1268.0	4 x 5		52,000	0.32	1.00	4.45	19.0	25	10.8	1.8	8.2	12.2	18.0	25.0	20.0	11.0	30.0	15.0
FL 866 a	1/2	12.70	1268.0	6 x 6		44,000	0.36	0.88	3.68	21.7	28	9.1	1.6	8.2	12.2	18.0	25.0	20.0	11.0	30.0	15.0
FL 866 bd	1/2	12.70	1268.0	3 x 3 [2]		62,000	0.40	1.17	4.45	20.6	28	10.8	1.5	8.2	–	18.0	–	20.0	11.0	–	–
FL 1044 bd	5/8	15.875	1587.5	2 x 2 [2]		57,000	0.37	1.12	5.08	16.8	28	13.7	1.8	10.4	16.2	20.0	35.0	25.0	12.0	45.0	21.0
FL 1066 bd	5/8	15.875	1587.5	3 x 3 [2]		86,000	0.55	1.68	5.08	24.0	35	13.7	1.8	10.4	16.2	20.0	35.0	25.0	12.0	45.0	21.0
FL 1266 bd	3/4	19.05	1898.0	3 x 3 [2]		115,000	0.76	2.18	5.72	30.0	40	14.9	2.2	10.4	16.2	20.0	35.0	25.0	12.0	45.0	21.0
FL 1644 d	1	25.40	2530.5	2 x 2 [2]		157,000	1.00	2.92	8.28	28.0	40	20.8	3.0	12.2	18.2	25.0	40.0	30.0	15.0	50.0	24.0
FL 1666 d	1	25.40	2530.5	3 x 3 [2]		231,000	1.50	4.35	8.28	41.0	50	20.8	3.0	12.2	18.2	25.0	40.0	30.0	15.0	50.0	24.0

[1] Straight side plates [2] double *iwis standard

End link design A

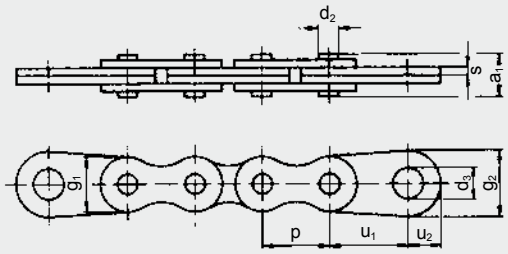

End link design B (from combination 4x4)

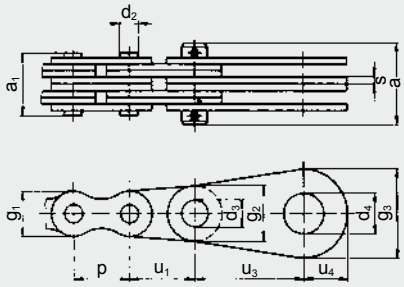

iwis Leaf Chains

are manufactured from precision iwis roller chain parts according to ISO 606. Therefore the actual pitch deviates from the nominal pitch. For length calculations use the length over 100 x pitch, not the nominal pitch.

Special versions and combinations with roller chains are available on request.

Dimensioning should be carried out with at least a 10-fold safety margin, depending on chain exposure to low- or high-impact shocks and subject to any regulations imposed by external authorities.

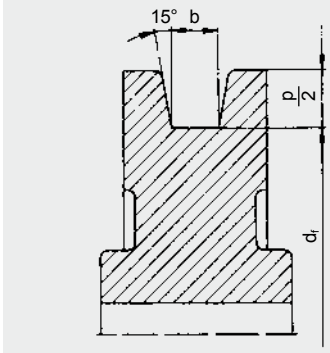

Example for the design of a deflection roller

Inner roller width:
$b = a_1 \cdot 1.15$
Minimum base diameter:
$d_{f\,min} = p \cdot 5$

Where possible, fit large diameters.

Chain Condition Monitoring

The new iwis chain elongation monitoring system CCM (Chain Condition Monitoring) measures the wear elongation of chains in operation, thus helping maintenance staff to recognise in advance when a chain will need to be replaced due to wear elongation.

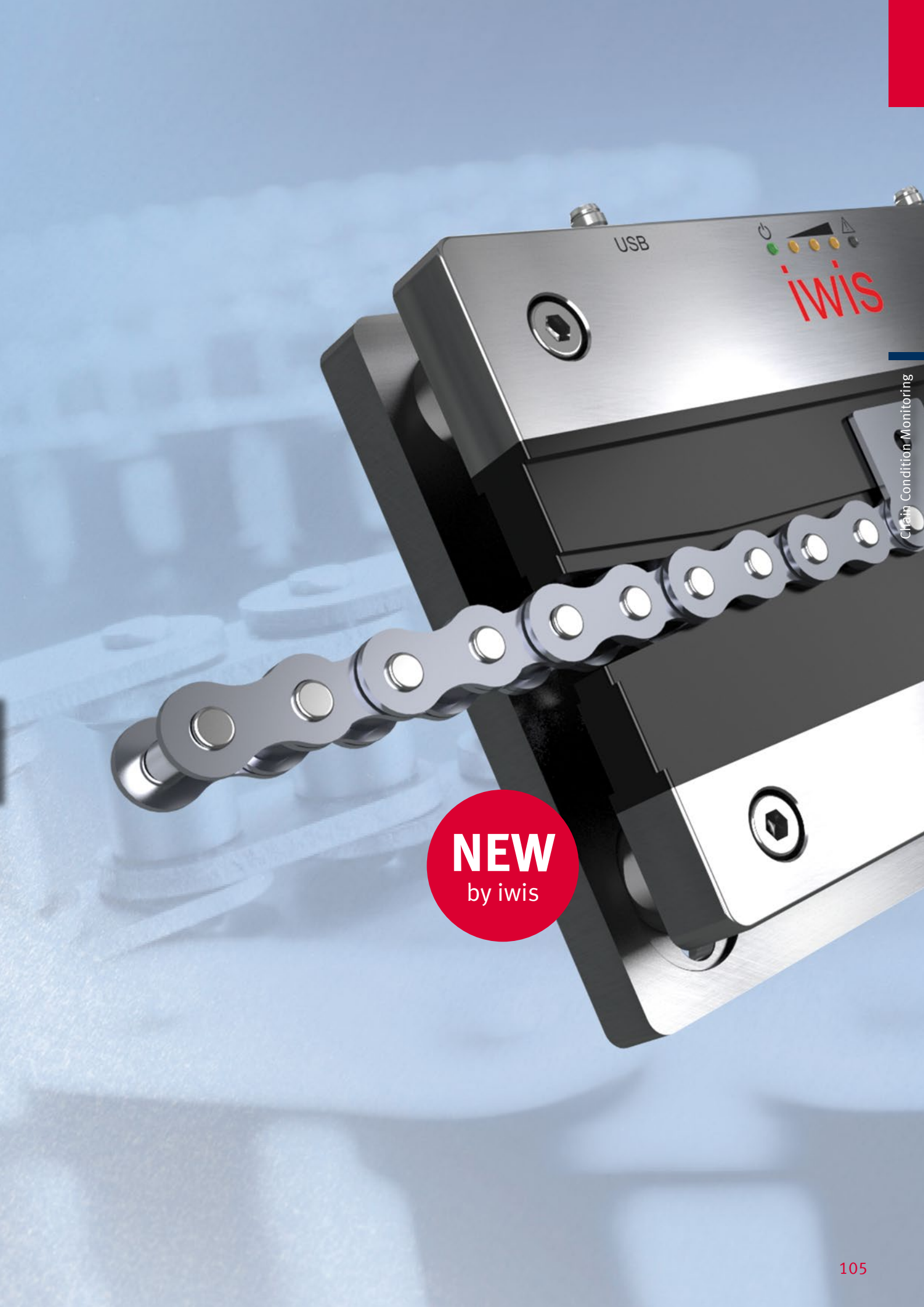
USB
iwis
NEW
by iwis

iwis Customer Service
Tel: +49 89 76909-1600 Fax: -1198 CallBack
sales-muenchen@iwis.com

Chain Condition Monitoring (CCM)

The Chain Elongation Monitoring

INTELLIGENT CHAIN MONITORING

- Gives maintenance staff time to (re)act!
- No long downtimes for plant or machinery
- No risk to promised delivery dates – no interruption of the logistics chain
- Prevents financial losses caused by missed production
- Monitoring of precision chain applications
- "Plug 'n' play" principle applies – does not require calibration etc.

✓ **Simple modular construction**
✓ **Revised design**

HIGHLIGHTS

- Chain wear status is shown in 0.5% steps on a finely graduated LED display.
- Measurement results can be transferred to a computer via USB connection and displayed on a special interface.
- Different speed ranges and changes of load direction are not a problem for CCM.
- Use of the system is not restricted to a small number of chain sizes: CCM always detects wear on one chain strand only, so it is equally effective on simplex, duplex and triplex chains.
- Precise, contact-free measurement with no direct interference in the chain drive.
- CCM is quick and easy to integrate – including retrofitting with no need for any special additional components – in numerous chain applications.

PRODUCT RANGE

Description	Article no.
CCM-06B-IWIS	40008846
CCM-08B-IWIS	40008847
CCM-08A-IWIS	40008897
CCM-10B-IWIS	40008850
CCM-10A-IWIS	40008898
CCM-12B-IWIS	40008851
CCM-12A-IWIS	40008899
CCM-16B-IWIS	40008853
CCM-16A-IWIS	40008900
CCM-20B-IWIS	40008854

iwis Customer Service
CallBack Tel: +49 89 76909-1600 Fax: -1198
sales-muenchen@iwis.com

OPERATING CONDITIONS

- Normal industrial environment conditions
  - special version of CCM required for strongly or highly abrasive applications!
- Operating temperature range: 0 °C to 70 °C
- Special inspection by iwis required before use on chains with attachments on both sides and extended pins
- Protection type: IP67
- Resistant to non-magnetic contamination
- We recommend the installation of damping elements (e.g. between housing and mounting plate) if the system is fitted at a customer interface
- Installation of the CCM system on the tight span is recommended; installation on the slack side also possible
- USB connection to PC interface
  - connection via USB plug 2.0 Typ A
- External power supply (24 V DC ± 20 %)
  - connection via exposed cable ends to cable terminal

CCM: A COMPREHENSIVE SOLUTION

- Included in delivery:
  - CCM system including mounting plate
  - Power supply cable
  - USB cable
  - PC software
  - Installation and operating instructions
- 3D Data available and can be supplied on request
- Installation kit with standard default setting Depth D = 50 mm (Depth D* depends on chain version and can be individually varied)
- See operating instructions for information on electrical and mechanical connections.

CONFIGURATIONS

Chain size	Chain speed
06B	0.10 – 4.80 m/s
08B / 08A	0.15 – 6.35 m/s
10B / 10A	0.15 – 7.90 m/s
12B / 12A	0.20 – 9.50 m/s
16B / 16A	0.25 – 12.50 m/s
20B	0.35 – 15.50 m/s

Lower and higher speed on request.

IMPORTANT The CCM system has a purely informative function – it explicitly offers neither protection against chain drive failures and machine breakdowns, nor information about the likelihood of chain elongation that may occur in future.

The customer is aware that the CCM system is supplied with a pre-set chain elongation reference value of 3%. This reference value was determined by iwis without taking any concrete application(s) into account. The customer will define the reference value himself and – on his own responsibility and for the specific application(s) in question – check whether the reference value is uncritical or can lead to critical situations or actual damage as a result of inadmissible chain elongation.

On request, and at an additional charge, iwis will change the pre-set reference value of 3% to a different value specified by the customer; however, the customer can also use the software supplied with the device to set a reference value suited to the requirements of his specific application.

Sprockets

The form of the sprockets is determined by the following factors: type of chain, the number of teeth, the torque to be transmitted and the application. A distinction is drawn between sprockets and chain plate wheels for roller chains according to Norm (e.g. ISO 606) and special versions. Sprockets with hub allow the transmission of a higher torque, whereas plate wheels may be used only for the transmission of small torques. For a detailed instruction regarding design and construction of sprockets and plate wheels, please refer to our iwis chain engineering hand book.

iwis Customer Service
Tel: +49 89 76909-1600 Fax: -1198 CallBack
sales-muenchen@iwis.com

iwis® Sprockets and Plate Wheels
according to ISO 606

AVAILABLE SPROCKETS AND PLATE WHEELS

ISO	Simplex roller chain	Duplex roller chain	Triplex roller chain
04	•	–	–
05 B	•	•	–
06 B	•	•	•
08 B	•	•	•
10 B	•	•	•
12 B	•	•	•
16 B	•	•	•
20 B	•	•	•
24 B	•	•	•
28 B	•	•	•
32 B	•	•	•

The iwis sprocket and plate wheel program will be supplied from our sister company iwis antriebssysteme GmbH in Wilnsdorf.

For more detailed information about our complete sprocket program, please take note of the catalogue “Sprockets and drive components”.

FURTHER AVAILABLE PRODUCTS

- Taper bush for sprockets
- Chain tensioning wheel complete with ball bearing - ready for installing
- Sprockets for taper bush
- Sliding hub range, series DA
- Sliding hub range, series FT
- ELITE sliding clutches, series FT
- Shaft coupling by chain coupling

ON REQUEST WE MANUFACTURE AND DELIVER

- Production of **keyways** in accordance with DIN 6885/1 in widths 3 P9/JS9 – 25 P9/JS9, various special sizes available on request
- Conventional **inner processing** of sprockets and turned parts with a max. outer diameter up to 620 mm and a turned length up to 500 mm
- Press-fitting of **ball bearings** in technical drawing-relevant components and production of **chain tensioning wheels** on hydraulic presses fitted with special fixtures
- If requested by the customer, we also offer inductive heat treatment of the gear tooth geometry to prolong material service life
- **Surface treatment** such as zinc plating, black oxidation or nickel plating
- Sprockets with **high tolerance requirements**
- **Drilling of pitch circle holes and threads**
- Production of mechanically processed parts of any geometry up to 350 mm diameter or max. dimensions of 1,050 mm x 560 mm x 460 mm

iwis Customer Service
CallBack Tel: +49 89 76909-1600 Fax: -1198
sales-muenchen@iwis.com

Notes

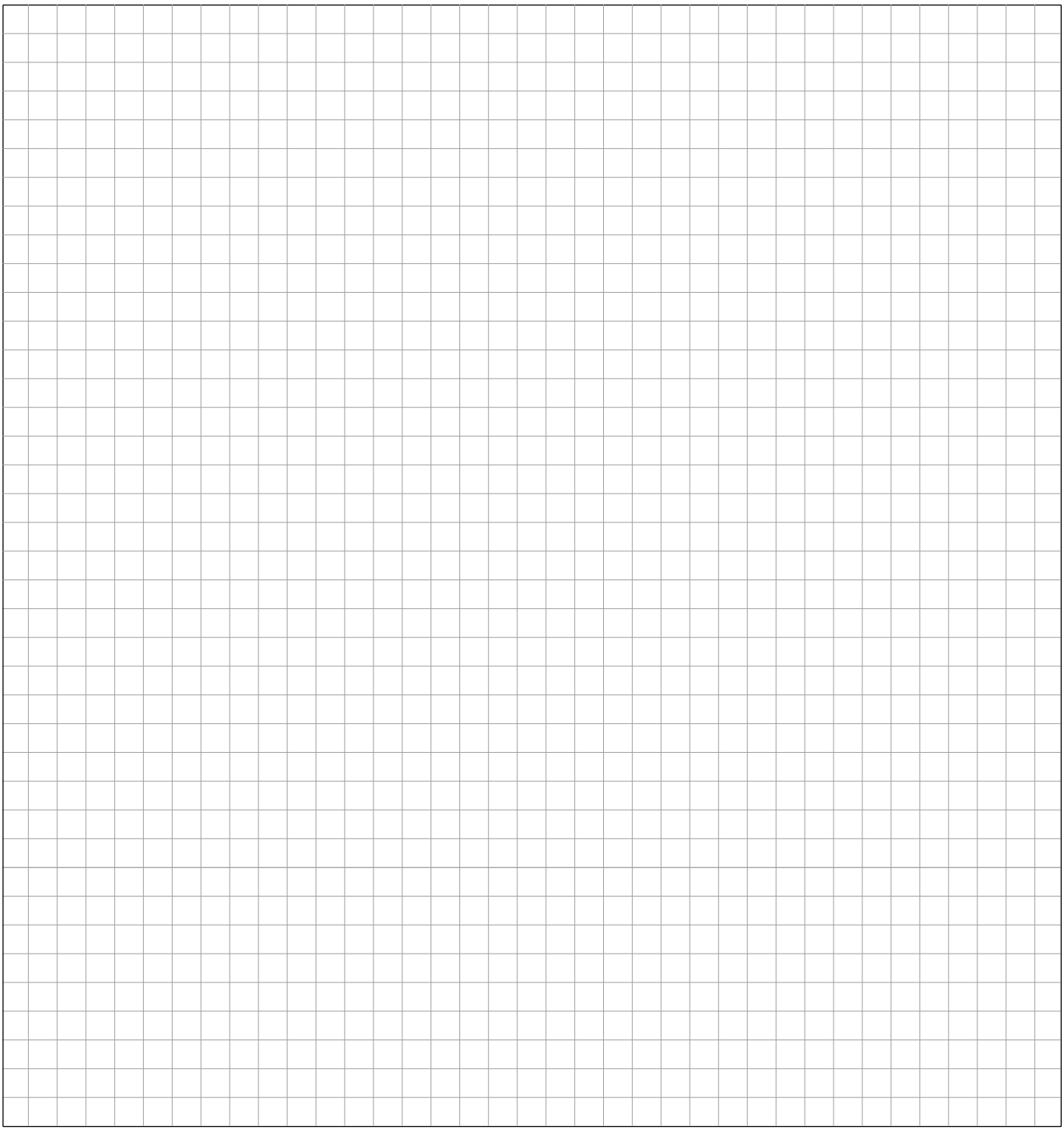

iwis® Tools

iwis tools facilitate the breaking and riveting of roller chains pursuant to ISO 606 and the iwis norm and are useful for workshop use. The iwis tool product range also includes repairing tools for tube and pin oven chains, accumulation chains and plate chains.

iwis Customer Service
Tel: +49 89 76909-1600 Fax: -1198 CallBack
sales-muenchen@iwis.com

iwis® Tool Set
for workshop use

The fork and anvil extraction kit is suitable for use with chains manufactured to ISO 606. Anvil (A) and fork (A 1) are suitable for breaking chains which have shouldered bearing pins.

To break chains with parallel bearing pins it is necessary to use plate (D 1) together with pin punch (B). The tool kits can also be used to assemble chains.

Fetching up punch (C) and bearing pin riveting punch (E) are used to complete this operation.

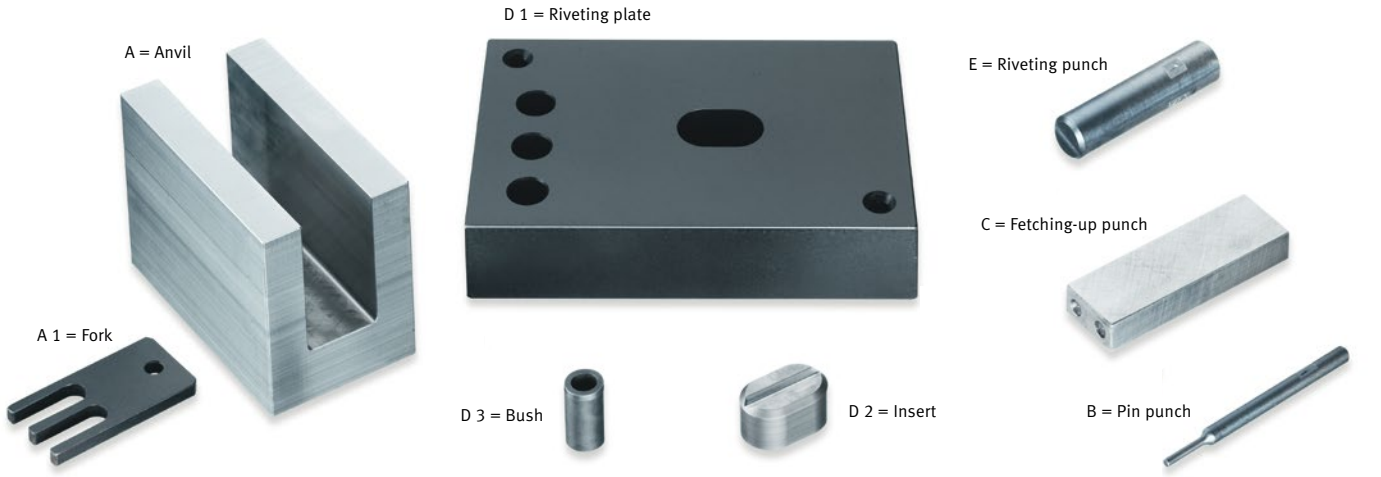

ISO	iwis reference	Pitch (") A	Anvil A	Fork A 1	Pin punch B	Fetching-up punch C	Riveting plate D 1	Insert D 2	Bush D 3	Riveting punch E
Order no.										
05 B	G 52, D 52	8 mm	–	–	5014	40006688	5024	5026	5033	5038
06 B	G 62 1/2, G 67, G 68, EC-6-M	3/8	–	–	5011	40006689	5024	5026	5033	5038
06 B	D 67, EC-6-D	3/8	5001	5007	5011	40006689	5024	5026	5033	5038
–	P 83 V	1/2	–	–	5011	40006692	5024	5026	5033	5038
08 A	S 84 V, L 85 A, D 85 A	1/2	–	–	5011	40006691	5024	5027	5034	5039
08 B	L 85 SL, D 85 SL, EC-8-M, EC-8-D	1/2	5000	5004	5012	40006690	5024	5027	–	5039
10 B	M 106 SL, D 106 SL, EC-10-M	5/8	5000	5005	5013	40006693	5024	5027	–	5039
10 A	M 106 A, D 106 A	5/8	–	–	5013	40006694	5024	5028	5034	5040
12 B	M 127 SL, D 127, EC-12-M, EC-12-D	3/4	5000	5006	5013	40006695	5024	5028	–	5040
12 A	M 128 A SL, D 128 A	3/4	–	–	5016	40006696	5024	5028	5035	5040
16 A	M 1610 A, D 1610 A	1	–	–	5015	40006705	5024	5029	5035	5041
16 B	M 1611, D 1611, EC-16-M, EC-16-D	1	5002	5008	5015	40006697	5024	5029	–	5041
20 B	M 2012, D 2012, EC-20-M, EC-20-D	1 1/4	5003	5009	5015	40006698	5025	5030	–	5042
24 B	M 2416, D 2416, EC-24-M, EC-24-D	1 1/2	–	5010	5017	40006699	5025	5032	5036	5044

iwis Customer Service
CallBack Tel: +49 89 76909-1600 Fax: -1198
sales-muenchen@iwis.com

Applications

Breaking chains and chain assembly

BREAKING (PARALLEL BEARING PIN)

Chain with parallel bearing pin

The outer link to be broken has to be placed over the holes in the riveting plate (D). The bearing pins are hammered flush with the outer plate and then driven through the chain with pin punch (B) whose diameter must be smaller than that of the bearing pin ❶.
To assist when breaking large pitch chains it is recommended that the rivet head is initially ground away.

BREAKING (SHOULDERED BEARING PIN)

Chain link with shouldered pin

The fork (A 1) is placed through the chain at the outer link which is to be removed. The fork is then supported by the anvil and the bearing pins are driven through the chain using punch (B) ❷. Multiple strand chains can also be broken in this way, the fork should then be placed in the top strand of the chain.

ASSEMBLY

The procedure used is common to both shouldered and parallel bearing pin chains. The new riveting link connects the two inner links. This connecting link is supported by an insert in riveting plate (D) ❸.

A new outer link plate is fitted using fetching-up punch (C) ❹. With parallel bearing pin chain it is possible to over fit the outer link plate on the bearing pins. It is necessary to check that the joint remains free and easily moveble after fitting.

The newly fitted outer link then requires the bearing pin ends to be riveted. This is done with riveting punch (E) ❺.

iwis Customer Service
Tel: +49 89 76909-1600 Fax: -1198 CallBack
sales-muenchen@iwis.com

iwis® Chain Breaker

How to use the iwis multi-station chain breaker

CHAIN BREAKER

This multi-station rivet extractor can be clamped in a vice or screwed onto the workbench. Positioning it along the front edge of the bench will provide clearance so that the full range of chains can be cut. Supports to the left and right make chain handling easier when long chains are being inserted.

The rotating head holds five sets of ejector tools. Each set is marked with the pitch of the chain which they cut. The rotating head holds five sets of ejector tools marked with the chain size. The following iwis chains can thus be taken apart at the correct setting.

A distinction is made here between:

- Chains with shouldered pins
- Chains with parallel pins

ARTICLE NO. 4500

REPLACING THE PRESSURE PINS AND SUPPORT FORKS

Pressure pins ❶:
Loosen grub screws ❷ pull pins out upwards. Replace as a complete set.

Support forks ❸:
Loosen top nut ❹ after knocking out safety spring pin. Press out middle bolt ❺ downwards and remove tool tray ❻ forward. Take out the two spring pins which secure the support fork. Insert new fork.

Pay attention when reassembling, that the pressure plate ❼ is correctly positioned with the latch pin at the back of the body casting. Tighten nut ❹ back up and secure with pressure pin.

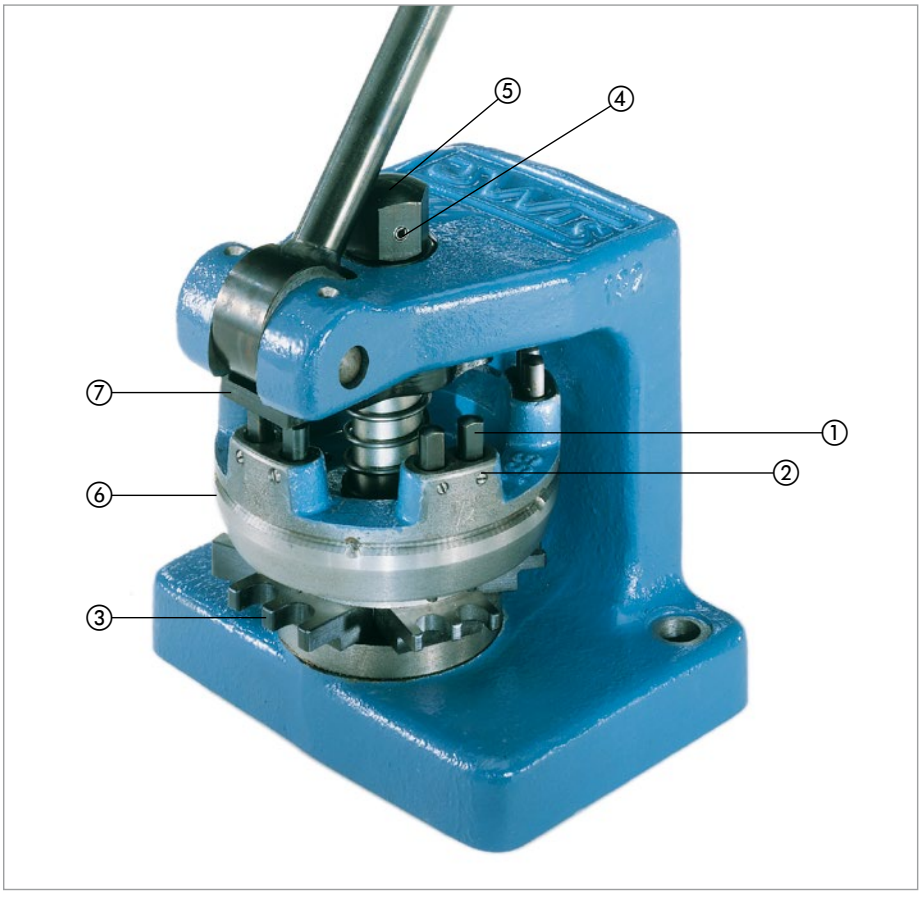

iwis Customer Service
CallBack Tel: +49 89 76909-1600 Fax: -1198
sales-muenchen@iwis.com

iwis® Chain Breaker

How to use the iwis multi-station chain breaker

A) CHAINS WITH SHOULDERED PINS

Chain link with shouldered pin

For breaking chains with shouldered pins the chain is fitted into the appropriate fork according to pitch, and the complete outer link is pressed out when the lever is pulled. It is important that the chain is fully located in the fork.

ISO	iwis reference	Pitch	Adjustment
06 B - 2	D 67	3/8 x 7/32	3/8
06 B - 3	TR 67	3/8 x 7/32	3/8
08 B - 1	L 85 SL	1/2 x 5/16	1/2
08 B - 2	D 85 SL	1/2 x 5/16	1/2
08 B - 3	TR 85	1/2 x 5/16	1/2
10 B - 1	M 106 SL	5/8 x 3/8	5/8
10 B - 2	D 106 SL	5/8 x 3/8	5/8
10 B - 3	TR 106	5/8 x 3/8	5/8
12 B - 1	M 127 SL	3/4 x 7/16	3/4
12 B - 2	D 127	3/4 x 7/16	3/4
12 B - 3	TR 127	3/4 x 7/16	3/4

B) CHAINS WITH PARALLEL PINS

Chains with parallel bearing pins

For breaking chains with parallel pins it is necessary to grind off the rivet heads on one side of the chain. Afterwards the outer link is pressed out as above.

ISO	ANSI type	iwis reference	Pitch	Adjustment
06 B - 1	–	G 67	3/8 x 7/32	3/8
08 A - 1	40-1	L 85 A	1/2 x 5/16	1/2
08 A - 2	40-2	D 85 A	1/2 x 5/16	1/2
08 A - 3	40-3	TR 85 A	1/2 x 5/16	1/2
10 A - 1	50-1	M 106 A	5/8 x 3/8	5/8
10 A - 2	50-2	D 106 A	5/8 x 3/8	5/8
10 A - 3	50-3	TR 106 A	5/8 x 3/8	5/8
12 A - 1	60-1	M 128 A SL	3/4 x 1/2	3/4
12 A - 2	60-2	D 128 A	3/4 x 1/2	3/4
12 A - 3	60-3	TR 128 A	3/4 x 1/2	3/4

If a grinding device is not available the rivets can be knocked out with a punch after the outer sideplate has been pressed off. Here the bushes must be well supported to prevent them coming off the inner plates when the pressure pins and support forks are being replaced. Although chains can be taken apart without pregrinding the riveted head the danger of damage to the bush bore does exist. This could reduce chain life. The iwis multi-station chain breaker can also be used to cut conveyor chains with straight or bent attachments plates of corresponding size. It is not suitable for 3/8 x 5/32" chains.

iwis Customer Service
Tel: +49 89 76909-1600 Fax: -1198 CallBack
sales-muenchen@iwis.com

iwis® Repairing Tool for Tube and Pin Oven Chains

Replacement of conveyor pins

SPECIAL TOOL

The above represented iwis tool has been specially developed to repair tube and pin oven chains.
It allows easy replacement of conveyor pins on already installed chains, types L 85 SL, M 106 SL, M 127 SL, M 128 ASL and M 128 A-SB (changeable).

Chain	Pitch	D_1	m
L 85 SL	12.7	8.0	22.0
M 106 SL	15.876	8.0	22.0
M 127 SL	19.05	8.0	22.0
M 128 ASL	19.05	10.0	22.0
M 128 A-SB	19.05	10.0	22.0

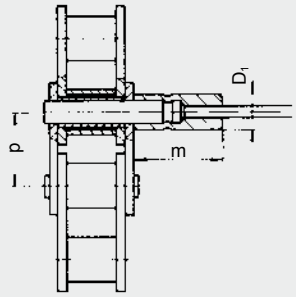

Repairing tool for tube chains and spare parts	Article No.
Mounting plier for adapter 8 mm	40000421
Tool / Insert 8 mm for assembling	40000424
Tool / Insert 8 mm for disassembling	40000425
Mounting plier for adapter 10 mm	40002625
Tool / Insert 10 mm for assembling	40000423
Tool / Insert 10 mm for disassembling	40000422

iwis Customer Service
CallBack Tel: +49 89 76909-1600 Fax: -1198
sales-muenchen@iwis.com

How to employ it

Removal and fastening of pin adapter

REMOVE PIN ADAPTER

Insert the adapter into the jaws ❶ and break it by closing the tool. If necessary, repeat the action after 45° rotation. Once the adapter has been broken, remove the pin.

FIXING OF A NEW CONVEYOR PIN

The new adapter is set onto the extended pin. Seize it with the gripping jaws ❷ and clamp it with the tool. Thus repaired, the chain is operational again.

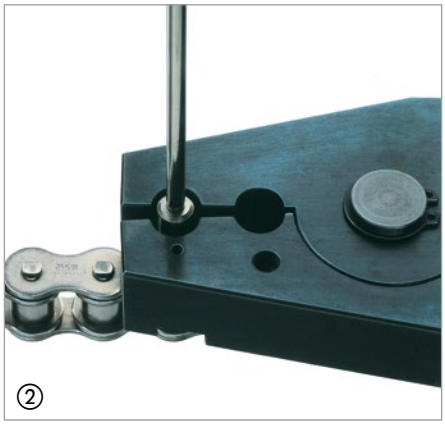

iwis Customer Service
Tel: +49 89 76909-1600 Fax: -1198 CallBack
sales-muenchen@iwis.com

iwis® Chain Pin Extractor and iwis® Chains Pullers

UNIVERSAL CHAIN PIN EXTRACTOR H

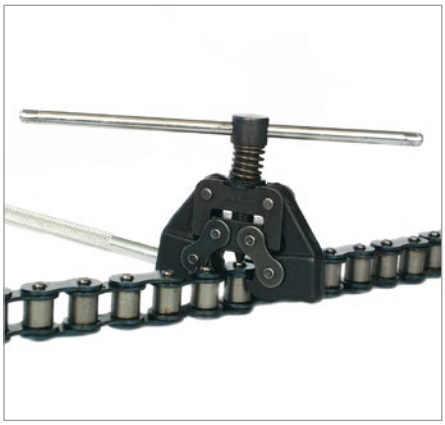

ARTICLE NO. 4511

For use with any chain having shouldered bearing pins only.

Chain ref:
- 08B-1 / L 85 SL
- 08B-2 / D 85 SL
- 08B-3 / TR 85
- 10B-1 / M 106 SL
- 10B-2 / D 106 SL
- 10B-3 / TR 106
- 12B-1 / M 127 SL
- 12B-2 / D 127
- 12B-3 / TR 127

The chain is clamped between the extractor jaws and the pins are then pressed out one by one by rotating the extractor handle.

SIMPLE RIVET EXTRACTOR F

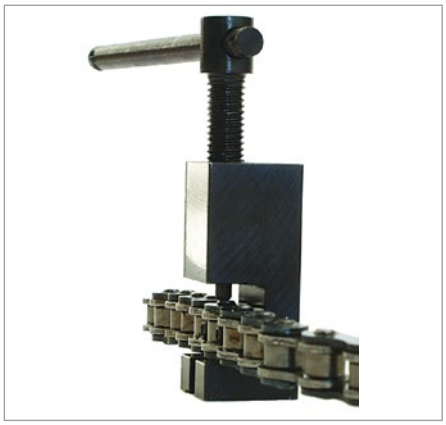

ARTICLE NO. 4516

For chains with parallel pins.

Chain ref:
- P 83 V
- S 84 V

The chain is placed in the tool and the pins are pressed one by one through both outer plates. (Note: This extractor should not be used on chain with shouldered pins).

CHAIN PULLERS

ARTICLE NO. A) 4518 B) 4519

a) No. 35 for 1/2 to 3/4" pitch chain
b) No. 80 for 1" to 2" pitch chains

The maximum opening range of the chain puller clamp is 50 mm for type a) and 125 mm for type b).

iwis Customer Service
CallBack Tel: +49 89 76909-1600 Fax: -1198
sales-muenchen@iwis.com

iwis® Tools for Breaking and Riveting of Roller Chains

Outline

	no.	Art-No.
Multi-station rivet extractor		4500
Spare parts for iwis multi station rivet extractor		
Pressure plate	7	9806
Spare-part-set fork and 2 punch points for 3/8" incl. spring		11926
Spare-part-set fork and 2 punch points for 1/2" incl. spring		11927
Spare-part-set fork and 2 punch points for 5/8" incl. spring		11928
Spare-part-set fork and 2 punch points for 3/4" incl. spring		11929
Universal rivet extractor		
Universal rivet extractor H for chains of 1/2" to 3/4" pitch		4511
Replacement spindle		4512
Reversible replacement pin		4513
Simple rivet extractors F no.4 for F82V, S84V, L85A		4516
iwis special tools		
Repairing tool for tube and pin oven chains		
Mounting plier for adapter 8 mm		40000421
Tool / Insert 8 mm for assembling		40000424
Tool / Insert 8 mm for disassembling		40000425
Mounting plier for adapter 10 mm		40002625
Tool / Insert 10 mm for assembling		40000423
Tool / Insert 10 mm for disassembling		40000422
Tool for accumulation chains		40000646
Replacement pin		40001734
Chain disassembly tool for plate chains		40003392
Tensioners for mounting procedure		
No. 35 3/8" to 3/4"		4518
No. 80 from 1" on		4519
Additional articles		
Chain gauge		4568
Chain lubricant **VP 6 Kombi superplus** 400 ml (packaging unit: 12 pcs.)		15701

CHAIN DISASSEMBLY TOOLS

ARTICLE NO. 40000646

For accumulation chains M 120 SF and M 127 SF with pitch 3/4".

CHAIN DISASSEMBLY TOOLS

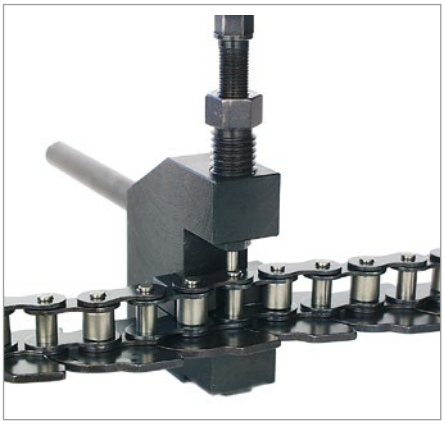

ARTICLE NO. 40003392

For plate chains M 127 with pitch 3/4".

iwis Customer Service
Tel: +49 89 76909-1600 Fax: -1198 CallBack
sales-muenchen@iwis.com

iwis® Tools
Outline

ISO	No.	Art-No.
Anvil A		
08 B, 10 B, 12 B	2	5000
06 B	3	5001
16 B	4	5002
20 B	5	5003
Fork A1		
08 B	2	5004
10 B	3	5005
12 B	4	5006
06 B	6	5007
16 B	8	5008
20 B	9	5009
24 B	10	5010
Pin punch B		
06 B, 08 A	1	5011
08 B	2	5012
10 B	3	5013
05 B	4	5014
20 B, 16 A, 16 B	5	5015
12 A	6	5016
24 B	7	5017
Fetching up punch C		
05 B	1	40006688
06 B	3	40006689
iwis norm 1/2"	4	40006692
08 A	5	40006691
08 B	6	40006690
10 B	7	40006693
10 A	8	40006694
12 B	9	40006695
12 A	10	40006696
16 A	11	40006705
16 B	12	40006697
20 B	13	40006698
24 B	14	40006699

ISO	No.	Art-No.
Riveting plate D1		
05 B-16 B, 08 A-16 A	1	5024
20 B, 24 B	2	5025
Insert D2		
05 B, 06 B	1	5026
08 A, 08 B, 10 B	2	5027
10 A, 12 A, 12 B	3	5028
16 A, 16 B	4	5029
20 B, 24 A	5	5030
20 A	6	5031
24 B	8	5032
Bush D3		
05 B, 06 B	1	5033
08 A, 10 A	2	5034
12 A, 16 A	3	5035
24 B	4	5036
–	5	5037
Riveting punch E		
05 B, 06 B	1	5038
08 A, 08 B, 10 B	2	5039
10 A, 12 A, 12 B	3	5040
16 A, 16 B	4	5041
20 B	5	5042
–	6	5043
24 B	7	5044

iwis Customer Service
CallBack Tel: +49 89 76909-1600 Fax: -1198
sales-muenchen@iwis.com

Notes

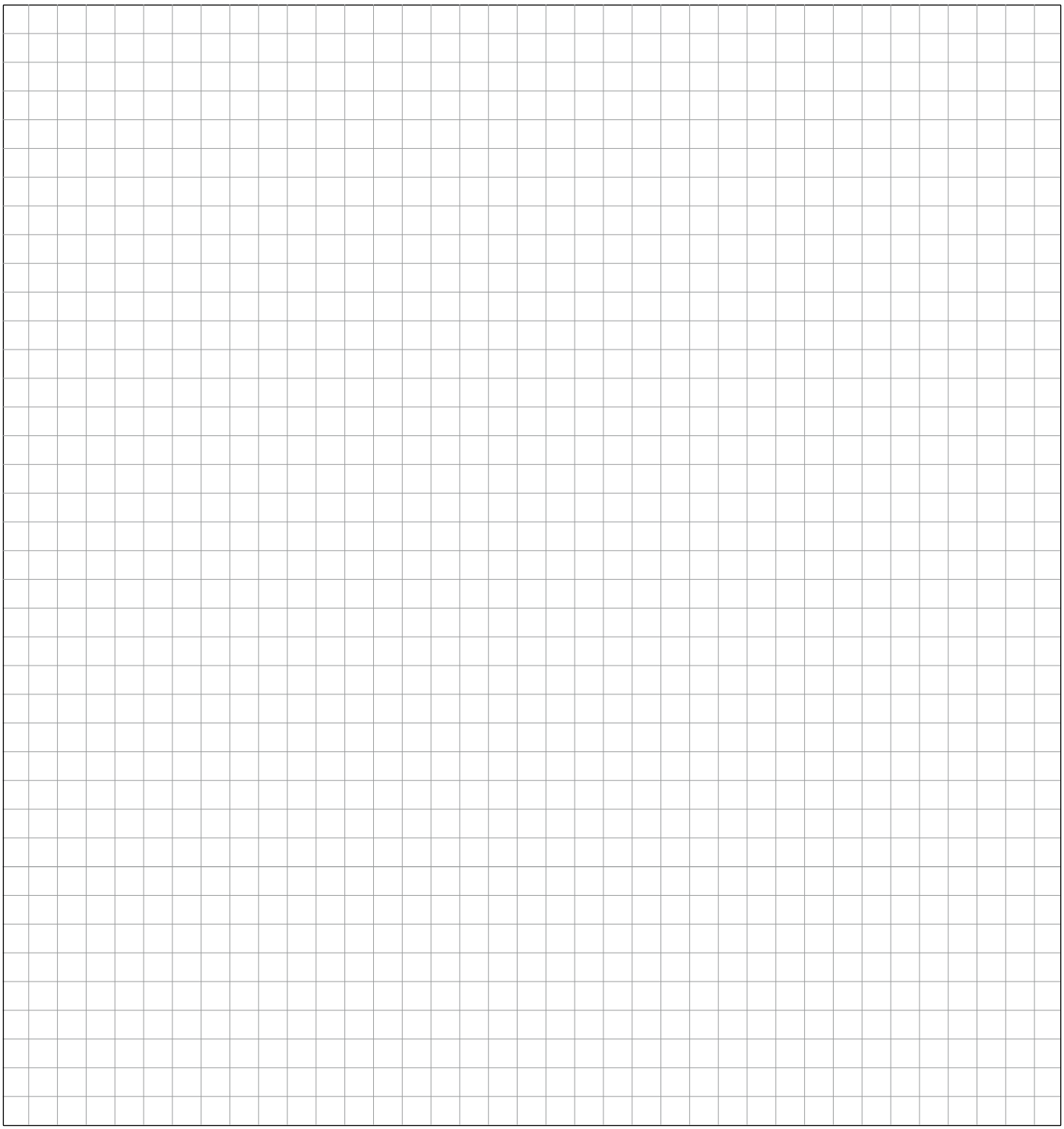

Automatic Tensioners

Automatic chain tensioners compensate the chain elongation in the machines and conveyor systems and that way further the run time of the applied chain. iwis chain tensioners are made from high quality materials. Depending on the application various types are available.

iwis Customer Service
Tel: +49 89 76909-1600 Fax: -1198 CallBack
sales-muenchen@iwis.com

iwis® RHR Type

with sprocket and bearing

	Chain pitch	Newton	A ± 1	B	C	D	E	F	G	H ± 1	L	Q	R	S	T	U	V	Z
Type RHR																		
RHR 111	3/8" x 7/32"	0÷100	58	6	8	35	80	M6	8.5	51	8	22	5	9.2	19.7	9.7	16.7	21
RHR 155	3/8" x 7/32"	0÷150	71	8	8.5	45	100	M8	10.5	64	8	30	6	9.2	19.7	9.7	16.7	21
RHR 155	1/2" x 5/16"	0÷150	71	8	8.5	45	100	M8	10.5	64	8	30	6	9.2	19.7	12.5	19.5	16
RHR 188	1/2" x 5/16"	0÷300	84	10.5	8.5	58	100	M10	13	78	10	37	8	9.2	19.7	12.5	19.5	16
RHR 188	5/8" x 3/8"	0÷300	85	10.5	8.5	58	100	M10	13	78	10	37	8	9.2	19.7	15.3	23.3	17
RHR 277	3/4" x 7/16"	0÷900	114	15	10.5	78	130	M12	17	107	12	53	10	9.2	19.7	17.7	25.7	15
RHR 277	1" x 17 mm	0÷900	114	15	10.5	78	130	M12	17	107	12	53	10	8.9	19.4	26.4	34.4	12

TYPE RHR

- Good damping effect, reducing noise and vibration
- Operating angle › 30° in both directions of rotation
- Simple screw mounting, internally or externally
- Operational temperature -40 °C to +80 °C
- Interchangeable to similar systems

EXAMPLE OF ORDER

Tensioner for 1/2" pitch single chain RHR 155 1/2" S. For single chain available from stock. For double chain on request

S = single chain **D** = double chain

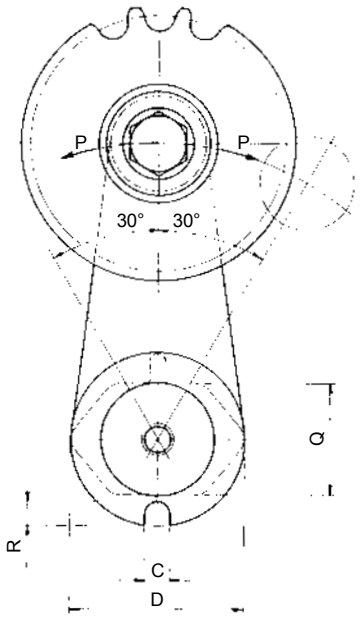

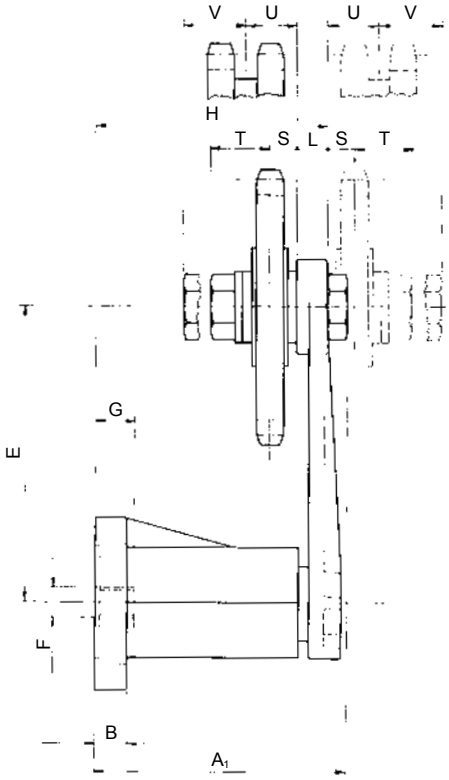

iwis Customer Service
CallBack Tel: +49 89 76909-1600 Fax: -1198
sales-muenchen@iwis.com

iwis® RHP Type

with low friction coefficent polythene head

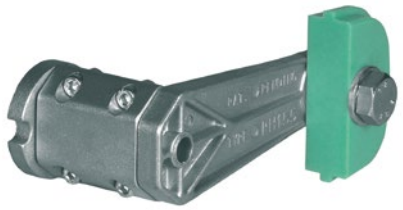

	Chain pitch	Newton	$A_1 \pm 1$	B	C	D	E	F	G	H ± 1	I	L	M	N	O	Q	R	U	Y
Type RHP																			
RHP 111	3/8" x 7/32"	0÷100	57	6	8	35	80	M6	8.5	51	7	8	20	70	20	22	5	22	102
RHP 155	3/8" x 7/32"	0÷150	70	8	8.5	45	100	M8	10.5	64	7	8	20	70	20	30	6	22	122
RHP 155	1/2" x 5/16"	0÷150	70	8	8.5	45	100	M8	10.5	64	7	8	20	70	20	30	6	22	122
RHP 188	1/2" x 5/16"	0÷300	84	10.5	8.5	58	100	M10	13	78	7	10	20	70	22	37	8	29	122
RHP 188	5/8" x 3/8"	0÷300	85	10.5	8.5	58	100	M10	13	78	8	10	25	90	22	37	8	29	129
RHP 277	3/4" x 7/16"	0÷900	114	15	10.5	78	130	M12	17	107	8	12	30	90	22	53	10	29	159
RHP 277	1" x 17 mm	0÷900	114	15	10.5	78	130	M12	17	107	8	12	45	110	25	53	10	35	165

EXAMPLE OF ORDER

Tensioner for 1/2" pitch single chain RHP 155 1/2" S. For single chain available from stock. For double chain on request.

S = single chain **D** = double chain

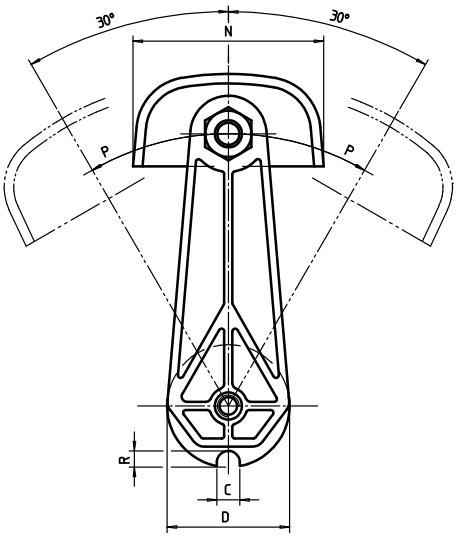

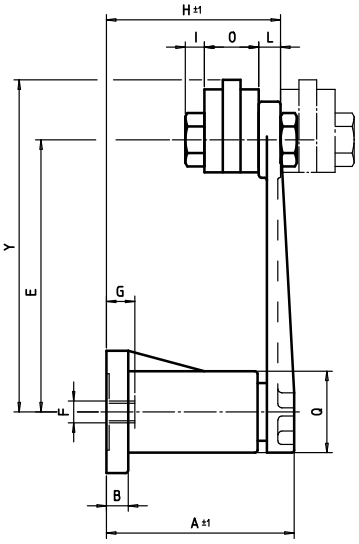

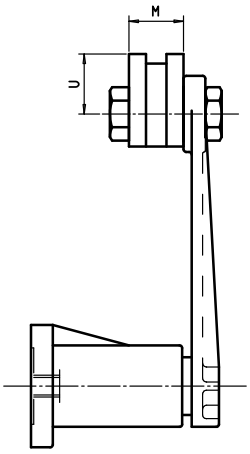

iwis Customer Service
Tel: +49 89 76909-1600 Fax: -1198 CallBack
sales-muenchen@iwis.com

iwis® TCR Type
with spocket and bearing

	Newton min.	Newton max.	Chain pitch	Z	A	B	C	CH	D	E	F	G	H	I	L	M	N	O	P	ß
Type TCR																				
*TCR-05 – 3/8"	30	80	3/8" x 7/32"	21	5	15	15	24	63	35	23	23	75.5	9.2	119	M10	19.7	–	–	45°
TCR-1 – 3/8"	50	180	3/8" x 7/32"	21	5	15.5	15.5	24	69	36	30	25	86.5	9.2	134	M10	19.7	18	11	45°
TCR-1 – 1/2"	50	180	1/2" x 5/16"	16	5	15.5	15.5	24	69	36	30	25	86.5	9.2	134	M10	19.7	16.5	12.5	45°
TCR-1 – 5/8"	50	180	5/8" x 3/8"	17	5	15.5	15.5	24	69	36	30	25	86.5	9.2	134	M10	19.7	21.8	15.3	45°
TCR-2 – 5/8"	120	500	5/8" x 3/8"	17	7	18	18	27	90	43	34	30	100	9.2	159	M12	19.7	21.8	15.3	30°
TCR-2 – 3/4"	120	500	3/4" x 7/16"	15	7	18	18	27	90	43	34	30	100	9.2	159	M12	19.7	19.4	17.7	30°
TCR-2 – 1"	120	500	1" x 17 mm	12	7	18	18	27	90	43	34	30	100	8.9	159	M12	19.4	23.9	26.4	30°
TCR-2 – 1 1/4"	120	500	1 1/4" x 3/4"	9	7	18	18	27	90	43	34	30	100	11.5	159	M12	19.4	–	–	30°
TCR-2 – 1 1/2"	120	500	1 1/2" x 1"	9	7	18	18	27	90	43	34	30	100	14	159	M12	19.4	–	–	30°

* Plastic version

TYPE TC

- Linear force progression
- Operating angle › 45° in both directions of rotation
- Simple screw mounting, internally or externally
- Operational temperature -20 °C to +130 °C
- Resistant against oil and solvents
- Better fastening due to 2 (TCR-1) resp. 3 (TCR-2) grooves

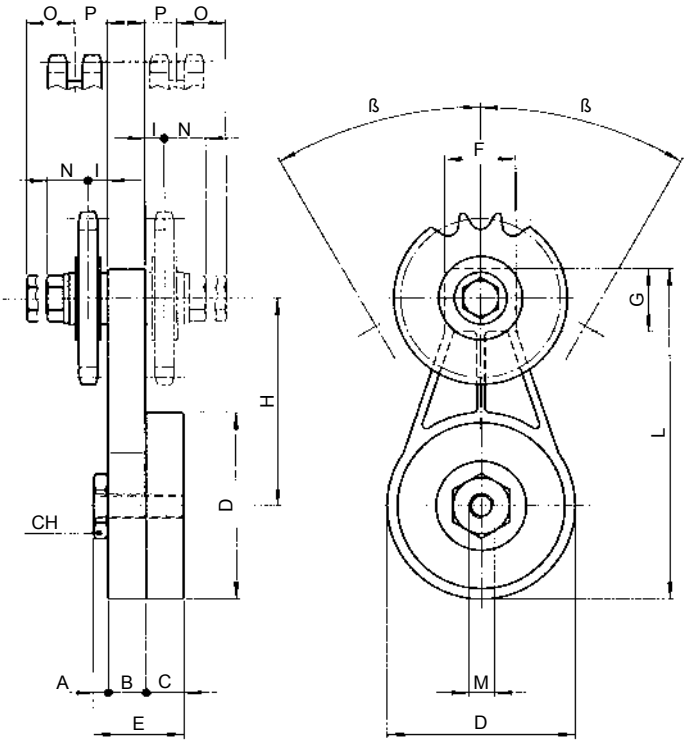

EXAMPLE OF ORDER

Tensioner for 1/2" pitch single chain TCP 1 1/2" S. For single chain available from stock. For double chain on request.

S = single chain **D** = double chain

iwis Customer Service
CallBack Tel: +49 89 76909-1600 Fax: -1198
sales-muenchen@iwis.com

iwis antriebssysteme
wir bewegen die welt

iwis® TCP Type

with low friction coefficent polythene head

	Newton min.	Newton max.	Chain pitch	A	B	C	CH	D	E	F	G	H	I	L	M	N	O	P	Q	ß
Type TCP																				
*TCP-05 – 3/8"	30	80	3/8" x 7/32"	5	15	15	24	63	35	23	23	75.5	5,5	119	M10	70	20	–	22	45°
TCP-1 – 3/8"	50	180	3/8" x 7/32"	5	15.5	15.5	24	69	36	30	25	86.5	7	134	M10	70	20	20	22	45°
TCP-1 – 1/2"	50	180	1/2" x 5/16"	5	15.5	15.5	24	69	36	30	25	86.5	7	134	M10	70	20	20	22	45°
TCP-1 – 5/8"	50	180	5/8" x 3/8"	5	15.5	15.5	24	69	36	30	25	86.5	7	134	M10	90	22	25	29	45°
TCP-2 – 5/8"	120	500	5/8" x 3/8"	7	18	18	27	90	43	34	30	100	8	159	M12	90	22	25	29	30°
TCP-2 – 3/4"	120	500	3/4" x 7/16"	7	18	18	27	90	43	34	30	100	8	159	M12	90	22	30	29	30°
TCP-2 – 1"	120	500	1" x 17 mm	7	18	18	27	90	43	34	30	100	8	159	M12	110	25	45	35	30°

* Plastic version

EXAMPLE OF ORDER

Tensioner for 1/2" pitch single chain
TCP 1 – 1/2" S. For single chain available from stock. For double chain on request.

S = single chain **D** = double chain

NOTE

Assembly instruction tensioner TC type
→ **Page 135**

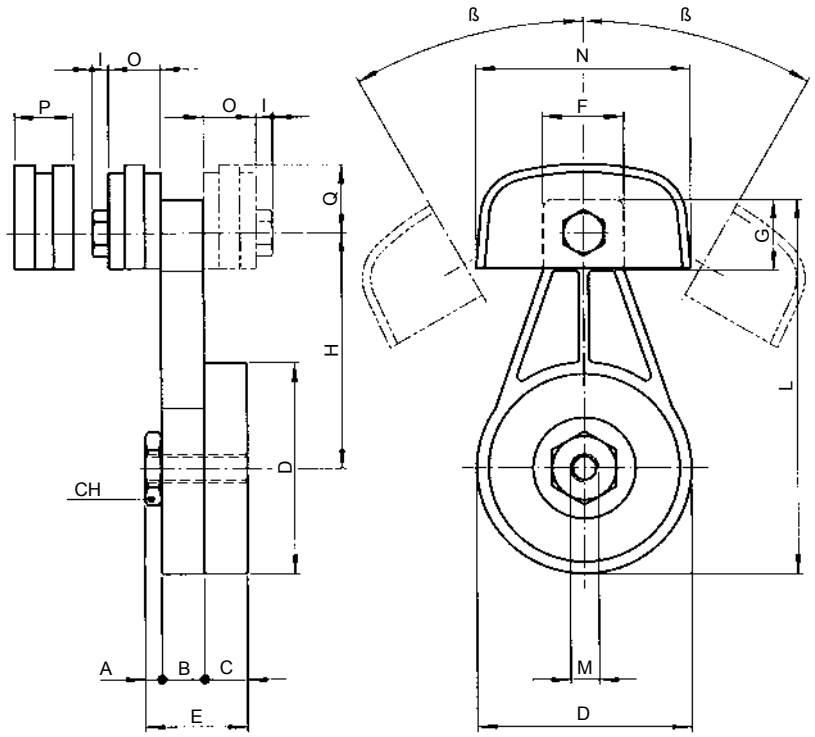

iwis Customer Service
Tel: +49 89 76909-1600 Fax: -1198 CallBack
sales-muenchen@iwis.com

iwis® TO Type

Automatic chain tensioners

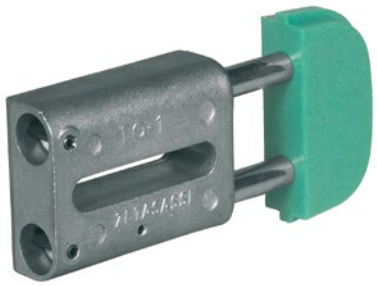

	Newton min.	Newton max.	Chain pitch	A1	A2	A3	B	C	D	E	F	G	H	I	L	M	N	O	P	R
Type TO																				
TO-1 – 3/8"	130	250	3/8" x 7/32"	20	20	25	23	12.5	11	56.2	7	58	74	110	138	–	–	–	70	100
TO-1 – 1/2"	130	250	1/2" x 5/16"	20	20	25	23	12.5	11	56.2	7	58	74	110	138	–	–	–	70	100
TO-1 – 5/8"	130	250	5/8" x 3/8"	20	25	41.5	23	12.5	11	56.2	7	58	74	110	138	–	–	–	70	100
TO-2 – 5/8"	180	420	5/8" x 3/8"	22	25	41.5	28	15	12.5	70.5	9	70	87	133	169	–	–	–	90	120
TO-2 – 3/4"	180	420	3/4" x 7/16"	22	30	49	28	15	12.5	70.5	9	70	87	133	169	–	–	–	90	120
TO-3 – 1"	300	650	1" x 17 mm	25	45	78	33	17.5	14.5	82	9	86	104	160	202	21	35	70	110	140
TO-3 – 1 1/4"	300	650	1 1/4" x 3/4"	25	54	90	33	17.5	14.5	82	9	86	104	160	202	21	35	70	110	140
TO-3 – 1 1/2"	300	650	1 1/2" x 1"	25	71	119	33	17.5	14.5	82	9	86	104	160	202	21	35	70	110	140
TO-05 – 3/8"	95	190	3/8" x 7/32"	20	–	–	25	12.5	9	60	10	53	75	120	149	22	48	1.5	70	100
TO-05-DP1 – 3/8"	95	190	3/8" x 7/32"	20	20	–	25	12.5	9	60	10	53	75	111	139	22	48	1.5	70	100
TO-05-DP1 – 1/2"	95	190	1/2" x 5/16"	20	20	–	25	12.5	9	60	10	53	75	111	139	22	48	1.5	70	100
TO-05-DP1 – 5/8"	95	190	5/8" x 3/8"	20	25	–	25	12.5	9	60	10	53	75	111	139	22	48	1.5	70	100

AUTOMATIC CHAIN TENSIONERS

The automatic tensioners take up the chain slackening and keep the tension constant, without any operator attending the adjustment. The TO-AT-ET tighteners are designed to last and are made of top quality materials. The maximum operating temperature is 65 °C (100 °C for the ET model only).

Available on request:

- Studs and spring in stainless steel AISI 304 for the Food industry
- Special head shapes
- Version TO-05 and TO-05 DP1 with basic body in plastic execution (DELRIN). Slight type with lower tensioning force – available on request.

* Plastic version

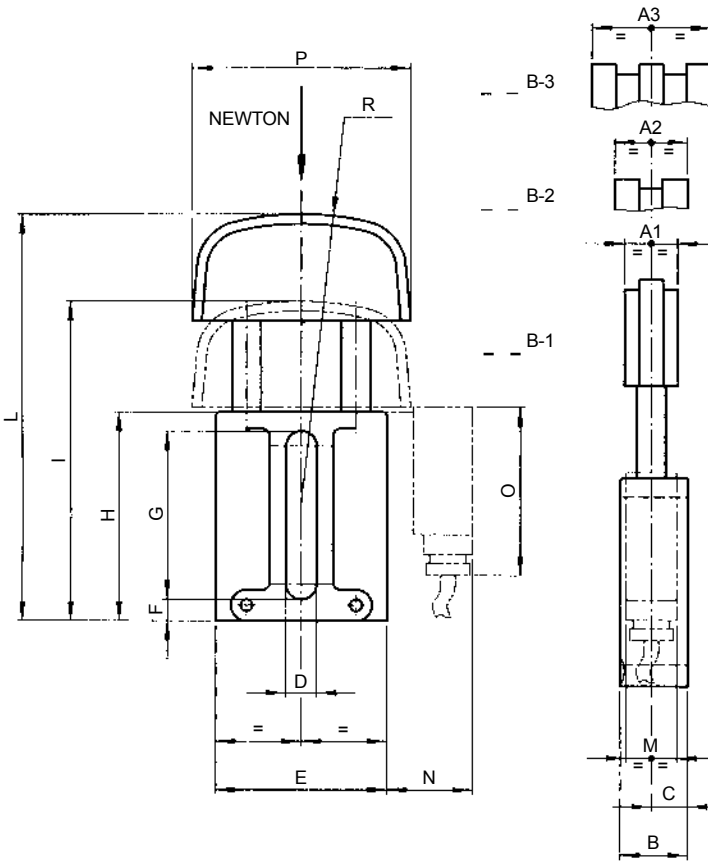

iwis Customer Service
CallBack Tel: +49 89 76909-1600 Fax: -1198
sales-muenchen@iwis.com

iwis® TA Type

	Newton min.	Newton max.	Chain pitch	A1	A2	A3	B	C	D	E	F	G	H	I	L	M	N	O	P	R
Type TA																				
TA-1 – 3/8"	130	250	3/8" x 7/32"	20	20	25	23	12.5	11	56.2	7	58	74	115	143	–	–	–	140	120
TA-1 – 1/2"	130	250	1/2" x 5/16"	20	20	35	23	12.5	11	56.2	7	58	74	115	143	–	–	–	140	120
TA-2 – 5/8"	180	420	5/8" x 3/8"	22	25	41.5	28	15	12.5	70.5	9	70	87	128	164	–	–	–	140	140
TA-2 – 3/4"	180	420	3/4" x 7/16"	22	30	49	28	15	12.5	70.5	9	70	87	128	164	–	–	–	140	140
TA-3 – 1"	300	650	1" x 17 mm	25	45	78	33	17.5	14.5	82	9	86	104	145	187	21	35	70	140	160
TA-3 – 1 1/4"	300	650	1 1/4" x 3/4"	25	54	90	33	17.5	14.5	82	9	86	104	145	187	21	35	70	140	160
TA-3 – 1 1/2"	300	650	1 1/2" x 1"	25	71	119	33	17.5	14.5	82	9	86	104	145	187	21	35	70	140	160
TA-3 – 1 3/4"	300	650	1 3/4" x 31 mm	29.5	–	–	33	17.5	14.5	82	9	86	104	145	187	21	35	70	140	160

TA SERIES

- Tensioning head made of low friction coefficient special wearproof plastic (dynamic friction coefficient 0.06 on dry steel)
- High tensile steel ground studs
- Self-lubricating bearings for axial slide

EXAMPLE OF ORDER

Tensioner for 1/2" pitch double chain
TA 1 – 1/2“ D

S = single chain **D** = double chain
T = triple chain

N.B.: Our tensioners are supplied for chains complying to ISO standards.

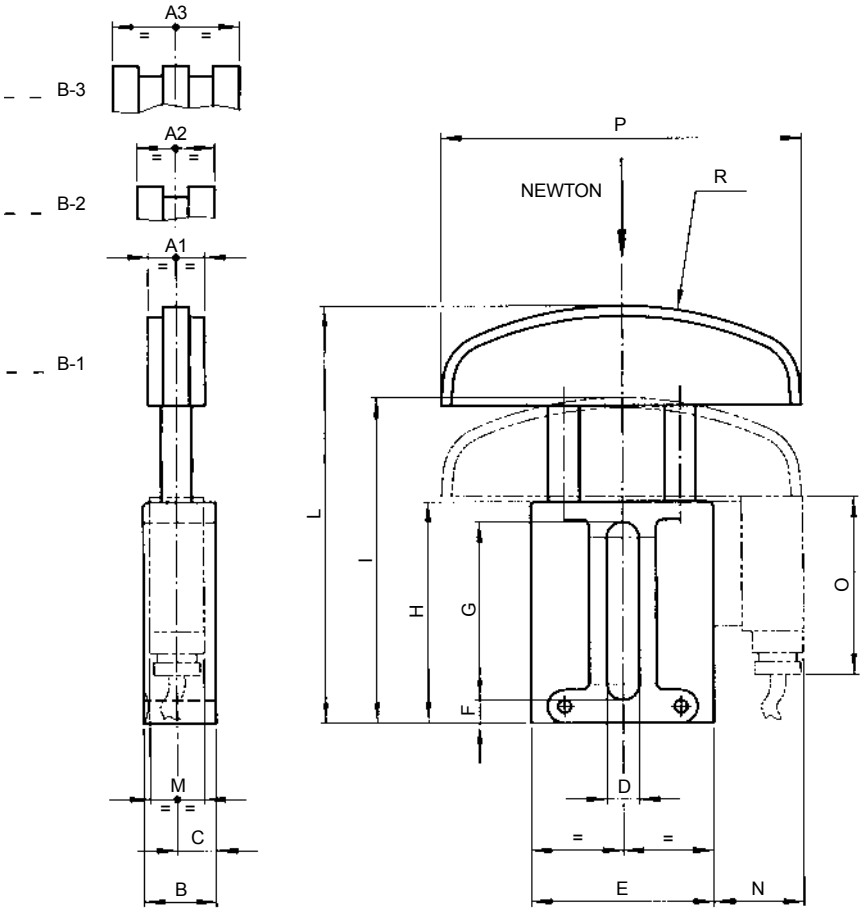

iwis Customer Service
Tel: +49 89 76909-1600 Fax: -1198 CallBack
sales-muenchen@iwis.com

iwis® ETR Type

with sprocket and bearing

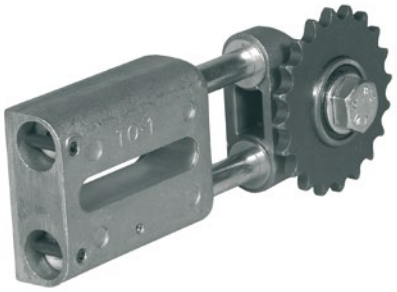

	Newton																			
	min.	max.	Chain pitch	Z	A	B	C	D	E	F	G	H	I	L	M	N	O	P	Q	R	S
Type ETR																					
ETR1 – 3/8"	130	250	3/8" x 7/32"	21	20	23	12.5	11	56.2	7	58	74	99	127	–	–	–	11	19.7	9.2	18
ETR1 – 1/2"	130	250	1/2" x 5/16"	16	20	23	12.5	11	56.2	7	58	74	99	127	–	–	–	12.5	19.7	9.2	16.5
ETR2 – 5/8"	180	420	5/8" x 3/8"	17	25	28	15	12.5	70.5	9	70	87	127	163	–	–	–	15.3	19.7	9.2	21.8
ETR2 – 3/4"	180	420	3/4" x 7/16"	15	25	28	15	12.5	70.5	9	70	87	127	163	–	–	–	17.7	19.7	9.2	19.4
ETR3 – 1"	300	650	1" x 17 mm	12	30	33	17.5	14.5	82	9	86	104	151	193	21	35	70	26.4	19.4	11.3	26.4
ETR3 – 1 1/4"	300	650	1 1/4" x 3/4"	9	30	33	17.5	14.5	82	9	86	104	151	193	–	–	–	29.7	19.4	11.5	37.5

ETR SERIES

- Maintenance-free
- Tensioning force changeable (option)
- Resistant against oil and solvents
- Simply mounting and adjustment
- Applies to reverse direction drives

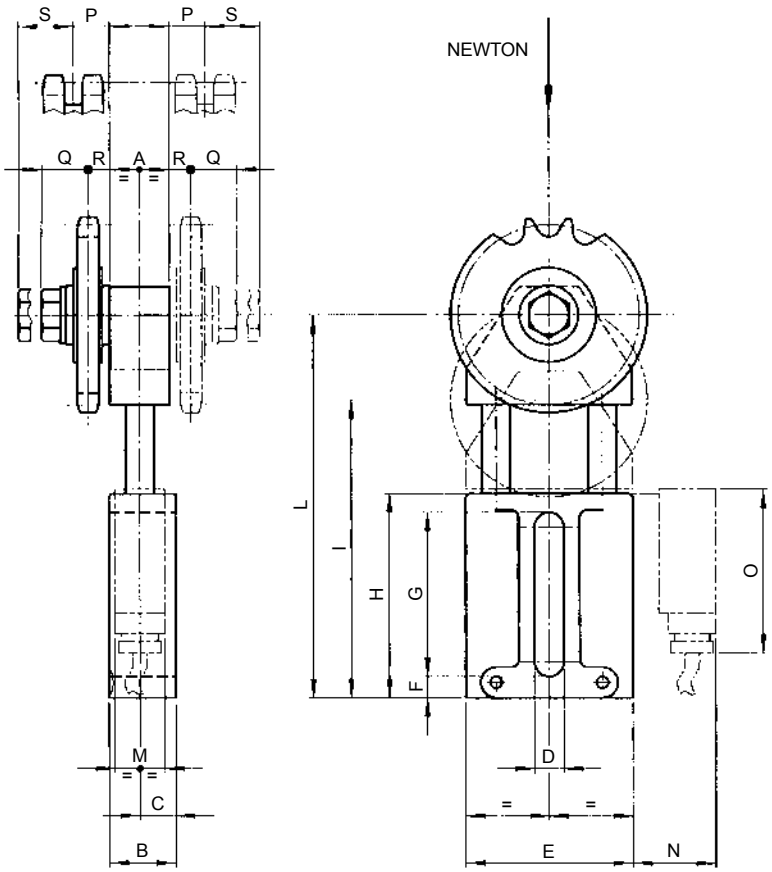

iwis Customer Service
CallBack Tel: +49 89 76909-1600 Fax: -1198
sales-muenchen@iwis.com

iwis® TF Type

Plastic tightening head

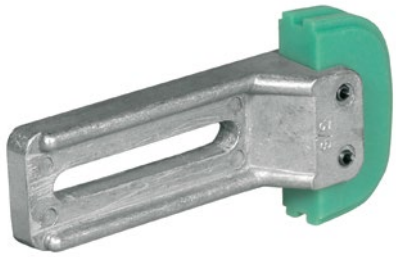

	Chain pitch	A	B	C	D	E	F	G	H	I	L	N	R	A_1	A_2
Type TF															
TF 1	3/8"	69	20	138	10	73	10.5	40	100	15	30	15	15	20	20
TF 1	1/2"	69	20	138	10	73	10.5	40	100	15	30	15	15.25	20	20.5
TF 2	5/8"	89	20	164	12	85	12.5	50	120	18	36	18	19.5	22	25
TF 2	3/4"	89	20	164	12	85	12.5	50	120	18	36	18	21.75	22	29.5
TF 3	1"	109	25	173	13	82	12.5	60	140	20	40	20	30.5	25	46
TF 3	1 1/4"	109	25	173	13	82	12.5	60	140	20	40	20	–	25	–
TF 3	1 1/2"	109	25	173	13	82	12.5	60	140	20	40	20	–	25	–

TF TYPE

- Wear resistant tensioning head in low friction (μ = 0.06) plastic
- Simple mounting and adjustment
- Operational temperature to 65 °C

EXAMPLE OF ORDER

Tensioner for 1/2" pitch double chain
TF 1 – 1/2" D

S = single chain **D** = double chain
T = triple chain

Our tensioners are supplied for chains complying to ISO standards.

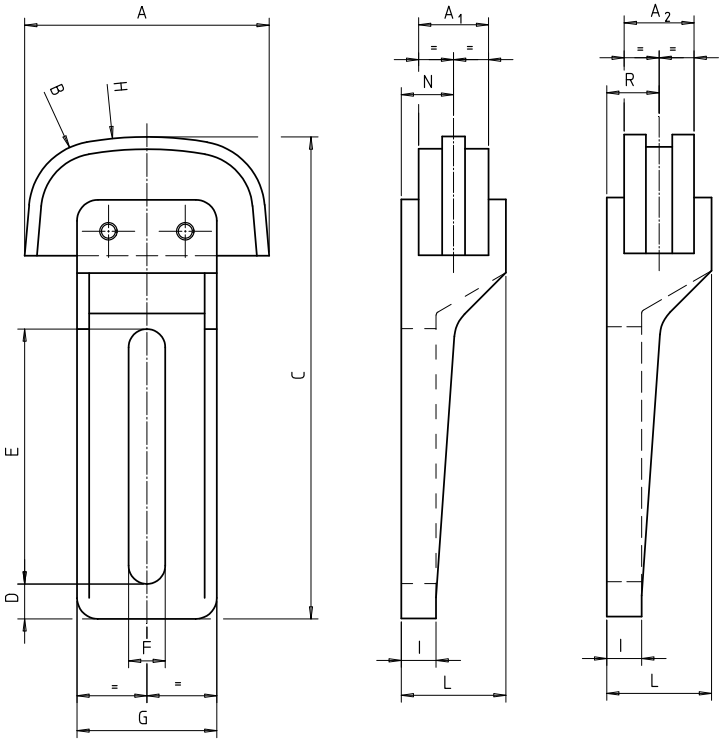

iwis Customer Service
Tel: +49 89 76909-1600 Fax: -1198 CallBack
sales-muenchen@iwis.com

iwis® Chain Tensioner AMS

with ratchet function

for iwis chain	ISO ref.	Tensioning Unit No.	No. of teeth z	Tensioning force N	Tensioning path S mm	Adjusting range mm	Dimensions A mm	Dimensions B mm	Basic element No.	Support bracket No.	Tensioner complete with wheel
Typ AMS											
G 67	06 B-1	10	21	0-100	0-25	60	47.6	39.4	AMS 11	01	AMS 116
G 67	06 B-1	10	21	0-100	0-25	60	47.6	39.4	AMS 12	02	AMS 126
L 85	08 B-1	10	18	0-100	0-25	60	47.6	39.4	AMS 11	01	AMS 118
L 85	08 B-1	10	18	0-100	0-25	60	47.6	39.4	AMS 12	02	AMS 128
M 106	10 B-1	10	17	0-100	0-25	60	47.6	39.4	AMS 11	01	AMS 1110
M 106	10 B-1	10	17	0-100	0-25	60	47.6	39.4	AMS 12	02	AMS 1210
M 127	12 B-1	20	15	0-300	0-45	40	52.0	40.0	AMS 23	03	AMS 2312
M 1611	16 B-1	20	12	0-300	0-45	40	52.65	41.3	AMS 23	03	AMS 2316

AMS TYPE

- Automatic retensioning
- Pawl and ratchet rebound safety mechanism
- Constant vibration damping
- Simple adjusting device
- Low in maintenance
- Resistant against oil and solvents

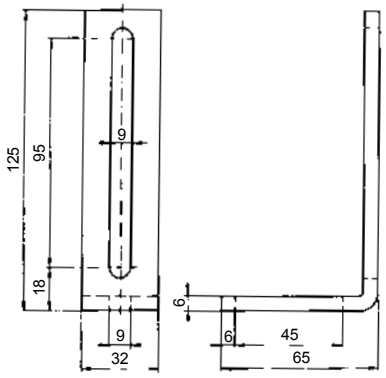

support bracket 01

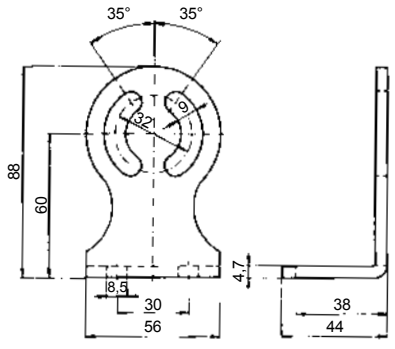

support bracket 02

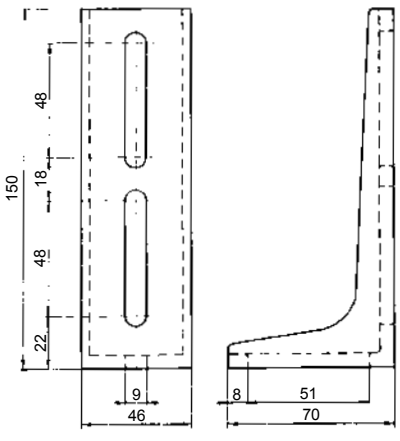

support bracket 03

iwis Customer Service
CallBack Tel: +49 89 76909-1600 Fax: -1198
sales-muenchen@iwis.com

iwis antriebssysteme
wir bewegen die welt

iwis® Chain Tensioner AMS

with ratchet function

AMS 10

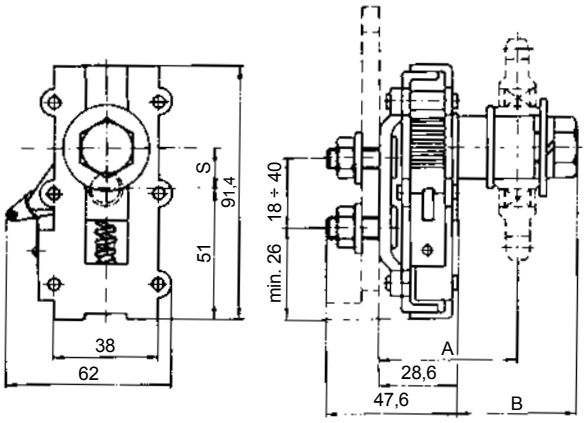

AMS 20

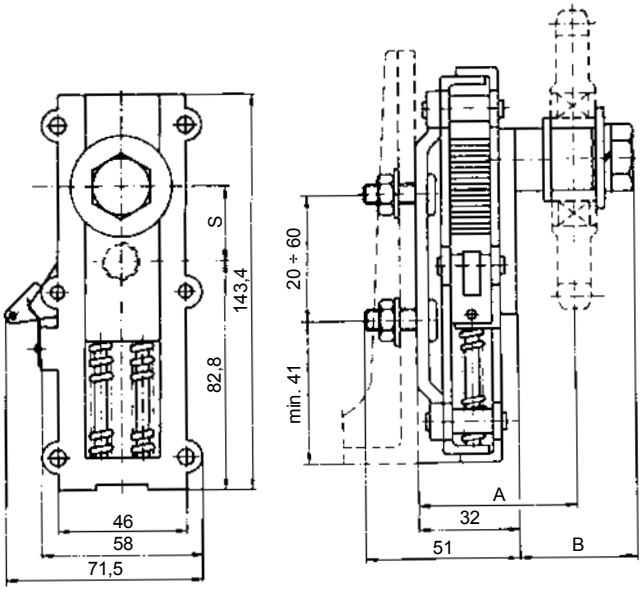

iwis® TC Type

Tensioner assembly TC Type

ALTERNATIVE A

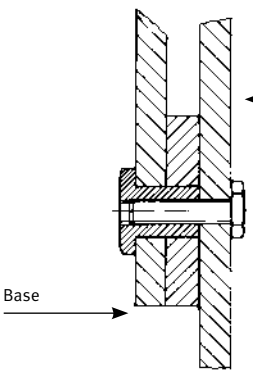

ALTERNATIVE B

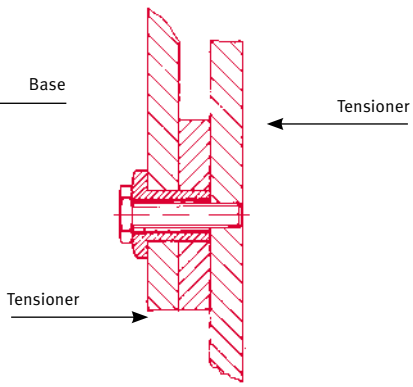

CORRECT ASSEMBLY

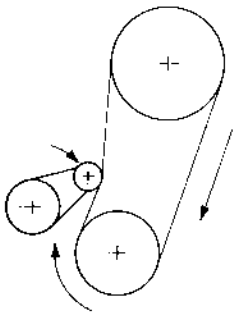

WRONG ASSEMBLY

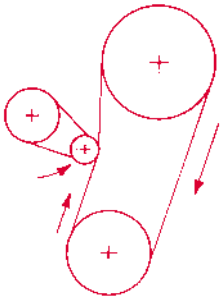

Chain Guide

Regular maintenance and lubrication are preconditions for low wear and long service life of the chain drive. The maintenance and lubrication frequency, as well as the related relubrication, are determined by the operating conditions of the application. The iwis chain guide outlines the choice of possible chain lubrications and recommended relubricants. All initial lubricants are developed especially for iwis and their composition is tailored to be the best possible for the product chain. Please contact our Technical Service Team for more information regarding the maintenance and handling of chains. We will happily advise you!

Our chain guide gives you an overview of our range of iwis initial lubricants and recommended relubricants. All initial lubricants are developed especially for iwis and their composition is tailored to meet all possible demands for our product ‘chain’.

iwis Customer Service
Tel: +49 89 76909-1600 Fax: -1198 CallBack
sales-muenchen@iwis.com

Lubricating the iwis® chains

iwis chain lubricants

THE BEST POSSIBLE SOLUTION FOR EVERY APPLICATION

Sufficient and effective lubrication increases the length of life of the chains several times over. The selection of the correct lubricant and the appropriate method of lubrication guarantee best reduction of wear, sufficient protection from corrosion and optional damping characteristics.

Countless trials on specially developed test equipment and close collaboration with well known lubricant manufacturers make iwis your competent partner for all questions relating to chain lubrication.

All iwis chains are provided with sufficient, reliable, high quality initial lubrication in accordance with precisely stipulated procedures, which are the subject of constant monitoring, and delivered ready for installation.

All the initial lubricants are developed especially for iwis and their composition is tailored to be the best possible for the chain product.

RECOMMENDATIONS

The chain drive should be cleaned with a brush before the lubricant is topped up to enable the lubricant to enter. In addition the surface of the chain can be cleaned with cleaner's naphtha or petroleum. Full submersion and washing out is not recommended.
Connecting elements (for example, connecting links), when supplied separately, have only been immersion-protected against rust and must be greased upon installation. If the connecting links are supplied together with the chains, they will have been greased with the same lubricant as the chains.

MANUAL LUBRICATION

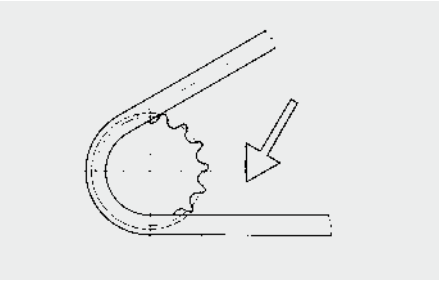

Using a paint brush, oil can or spray can for slow-running chain drives. The proven VP6-Kombi superplus (spray) is distinguished by the following characteristics:

- Synthetic high performance chain lubricant
- Optimum lubricating effect and adhesion
- Excellent ability to creep
- For normal and high temperature use up to +250 °C (+482 °F)
- Excellent corrosion protection
- Also well suited to O-ring chains

DRIP LUBRICATION

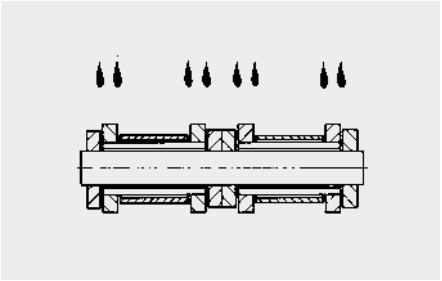

Using drip oilers, automatic lubricant feed or central lubrication units at medium chain speeds.

OIL BATH LUBRICATION

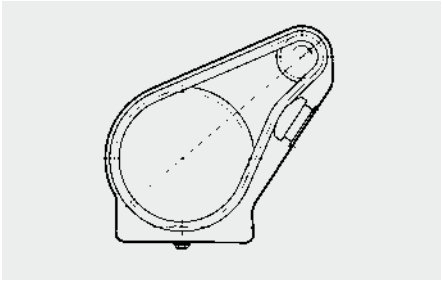

Using enclosed chain boxes and, if necessary, additional centrifugal disc for fast-running chain drives

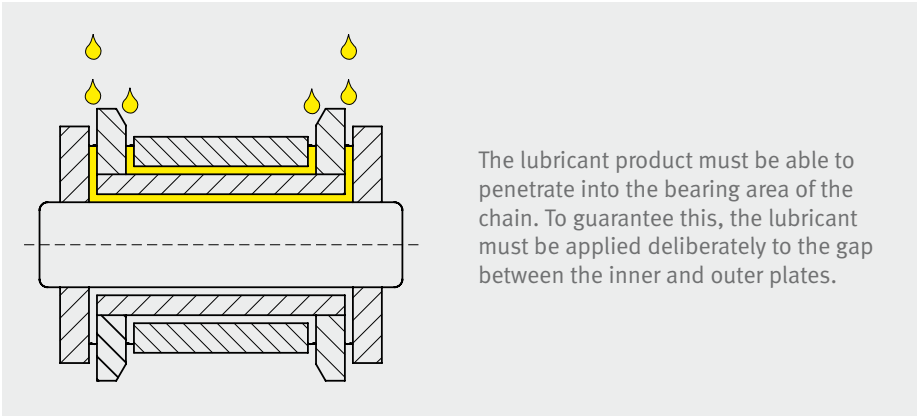

The lubricant product must be able to penetrate into the bearing area of the chain. To guarantee this, the lubricant must be applied deliberately to the gap between the inner and outer plates.

iwis Customer Service
CallBack Tel: +49 89 76909-1600 Fax: -1198
sales-muenchen@iwis.com

Perfect maintenance of iwis® chain drives

Regular maintenance and lubrication are preconditions for low wear and long service life of the chain drive. Maintenance and lubrication frequency, as well as the related relubrication, is determined by operating conditions (tensile forces, temperature, contamination, aggressive media).

MEASUREMENT OF STRETCHING DUE TO WEAR

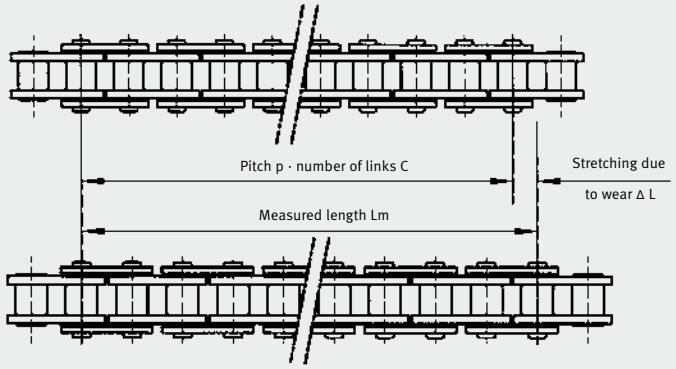

$$\Delta L = \frac{Lm - (p \cdot X)}{p \cdot X} \cdot 100\ [\%]$$

MAINTENANCE

During **regular visual inspections** special attention should be paid to **stretching due to wear, tension, lubrication condition, and evidence of wear due to tracking errors.**

Checking the maximum permissible stretching due to wear:

The length of a chain is defined by the pitch p and the number of links X. In the course of time stretching due to wear occurs, and usually this can be measured without removing the chain. The difference from precise measurement with a specified measurement load is slight if measurements are conducted over the highest possible number of chain links, approximately 20 to 40.

The **chain should be replaced** at:
- max. 3 % for simple drives
- max. 2 % for high-performance drives
- max. 1 % for special applications (synchronous operation, positioning)

Controlled **retensioning** of the chains has a very positive effect on the chain life. Extreme retensioning should be avoided just as much as excessive slack. A guideline figure would be a tension load of approx. 5 % of the actual chain pulling force. In the case of chains running in parallel both strands must be tensioned equally, at best by a common shaft for both sprockets. If no automatic chain tensioning device is available, the chain must be adjusted by hand by altering the distance between the sprocket shafts. A further possibility with long drives is to shorten the chain by removing individual links, provided that wear is relatively light. Various tools are available for dismantling and reassembling the chain. These tools are available for parallel pin and shouldered pin chains.

Before **relubrication** the chains and sprockets should be **cleaned** to remove obstinate contamination and to permit the lubricant to penetrate via the back of the plates. The surface of the chain can also be cleaned using an appropriate solvent.

Complete immersion and washing is not recommended as the cleaning agent does not evaporate completely from within the chain and thus the penetration of the fresh lubricant is obstructed.

During **visual inspection** attention should be paid to evidence of chain linkplate marking and wear due to tracking errors. These are caused by misaligned sprockets or guides or by chains which are not in parallel.

Guide for alignment deviations per 100 mm axle separation:
- 0.1 mm with fast-running drives and close axle spacing;
- 0.2 mm with slow-running drives.

The sprockets should be constantly inspected and if necessary replaced. We do not recommend that new chains are used with worn sprockets.

iwis Customer Service
Tel: +49 89 76909-1600 Fax: -1198 CallBack
sales-muenchen@iwis.com

iwis® Lubricants

The optimum solution for every application

A SUMMARY OF OUR INITIAL LUBRICANTS

IP0 Low-temperature lubricant

A low-temperature lubricant with optimum lubricating properties and consistent fluidity over the entire temperature range.

Technical data:

Chemical composition	Ester oil + synthetic hydrocarbon oil + UV indicator
Colour	Brown
Viscosity	Kinematic (40 °C | 104 °F): 68 mm²/s
Density	Approx. 0.92 g/cm³ (20 °C | 68 °F)
Physical state	Liquid
Operating temperature	-45 °C (-49 °F) to +150 °C (+302 °F)

iwis recommendation for relubricants

- All low-temperature commercial chain oils

IP2 Standard lubricant

The proven standard lubricant with a good lubricating effect and excellent corrosion protection for applications of all kinds.

Technical data:

Chemical composition	Mineral oil + synthetic hydrocarbon oil
Colour	Brown
Viscosity	Kinematic (40 °C | 104 °F): 12 cm²/s (1200 cSt)
Density	0.9 g/cm³ (20 °C | 68 °F)
Physical state	Liquid
Operating temperature	-10 °C (+14 °F) to +80 °C (+176 °F)

iwis recommendation for relubricants

- iwis VP6 Kombi Superplus (spray)
- All standard commercial chain oils

IP3 Long-lasting lubrication

Long-lasting lubrication at higher speeds, loads and temperatures. As a consequence of its high viscosity, it is absolutely resistant to spinning off over the entire temperature range.

Technical data:

Chemical composition	Mineral oil + synthetic hydrocarbon oil
Colour	Brown
Viscosity	Kinematic (40 °C | 104 °F): 7200 - 8800 mm²/s
Density	0.9 g/cm³ (20 °C | 68 °F)
Physical state	Liquid
Operating temperature	0 °C (+32 °F) to +150 °C (+302 °F)

iwis recommendation for relubricants

- iwis VP6 Kombi Superplus (spray)
- Standard commercial high-performance chain oils

IP4 High-temperature lubricant

Thermally stable high-temperature lubricant with good wear- and corrosion-resistance. Low evaporation rate in the temperature range from 32° to +482 °F. Forms no residue at temperatures above 482 °F. NSF-H2 approved.

Technical data:

Chemical composition	Ester oil + synthetic hydrocarbon oil
Colour	Yellow
Viscosity	Kinematic (40 °C | 104 °F): 11.75 cm²/s
Density	0.91 g/cm³ (20 °C | 68 °F)
Physical state	Liquid
Operating temperature	0 °C (+32 °F) to +250 °C (+482 °F)

iwis recommendation for relubricants

- iwis VP6 Kombi Superplus (spray)
- High-temperature chain oils from various suppliers, suitable for operating temperatures over +250 °C (+482 °F) with a proportion of solid lubricant

A SUMMARY OF OUR INITIAL LUBRICANTS

IP9 Corrosion-protection

The corrosion-protection for preservative use with a low lubricant effect.

Technical data:

Chemical composition	Synthetic hydrocarbon oil + ester oil
Colour	Brown
Viscosity	Kinematic (40 °C | 104 °F): 20 mm^2/s
Density	Approx. 0.86 g/cm^3 (20 °C | 68 °F)
Physical state	Liquid
Operating temperature	0 °C (+32 °F) to +150 °C (+302 °F)

iwis recommendation for relubricants

- iwis VP6 Kombi Superplus (spray)
- All standard commercial chain oils

IP14 Stove-enamelled dry lubricant

Dry lubricant for slow-running chain drives and low to medium loads.

Technical data:

Colour	Dark grey
Operating temperature	-70 °C (-94 °F) to +250 °C (+482 °F)

iwis recommendation for relubricants

- iwis VP6 Kombi Superplus (spray)
- Chain oils with a proportion of solid lubricant e.g. graphite or molybdenum disulphide (MoS_2)

IP16 Food-grade lubricant

The lubricant for food use with good wear- and corrosion-resistance. Meets the requirements of USDA-H1 and LMBG – authorised for contact with food.

Technical data:

Chemical composition	Synthetic hydrocarbon oil + ester oil
Colour	Yellow
Viscosity	Kinematic (40 °C | 104 °F): 15 cm^2/s (1500 cSt)
Density	Approx. 0.86 g/cm^3 (20 °C | 68 °F)
Physical state	Liquid
Operating temperature	-25 °C (-13 °F) to +120 °C (+248 °F)

iwis recommendation for relubricants

- Food-grade chain lubricants

IPW High-performance lubricating wax

The handling-resistant high-performance lubricating wax with very high wear protection permits significantly longer intervals between applications of lubricant. Problem-free use as a „barrier grease“ in all environments where dust and powder are present.

Technical data:

Chemical composition	Wax + mineral oil + synthetic hydrocarbon oil
Colour	Beige
Density	Approx. 0.89 g/cm^3 (20 °C | 68 °F)
Physical state	Paste
Operating temperature	-10 °C (+14 °F) to +80 °C (+176 °F)

iwis recommendation for relubricants

- iwis VP6 Kombi Superplus (spray)
- Standard commercial high-performance chain oils

iwis Customer Service
Tel: +49 89 76909-1600 Fax: -1198 CallBack
sales-muenchen@iwis.com

iwis® Lubricants

Overview of all temperature ranges

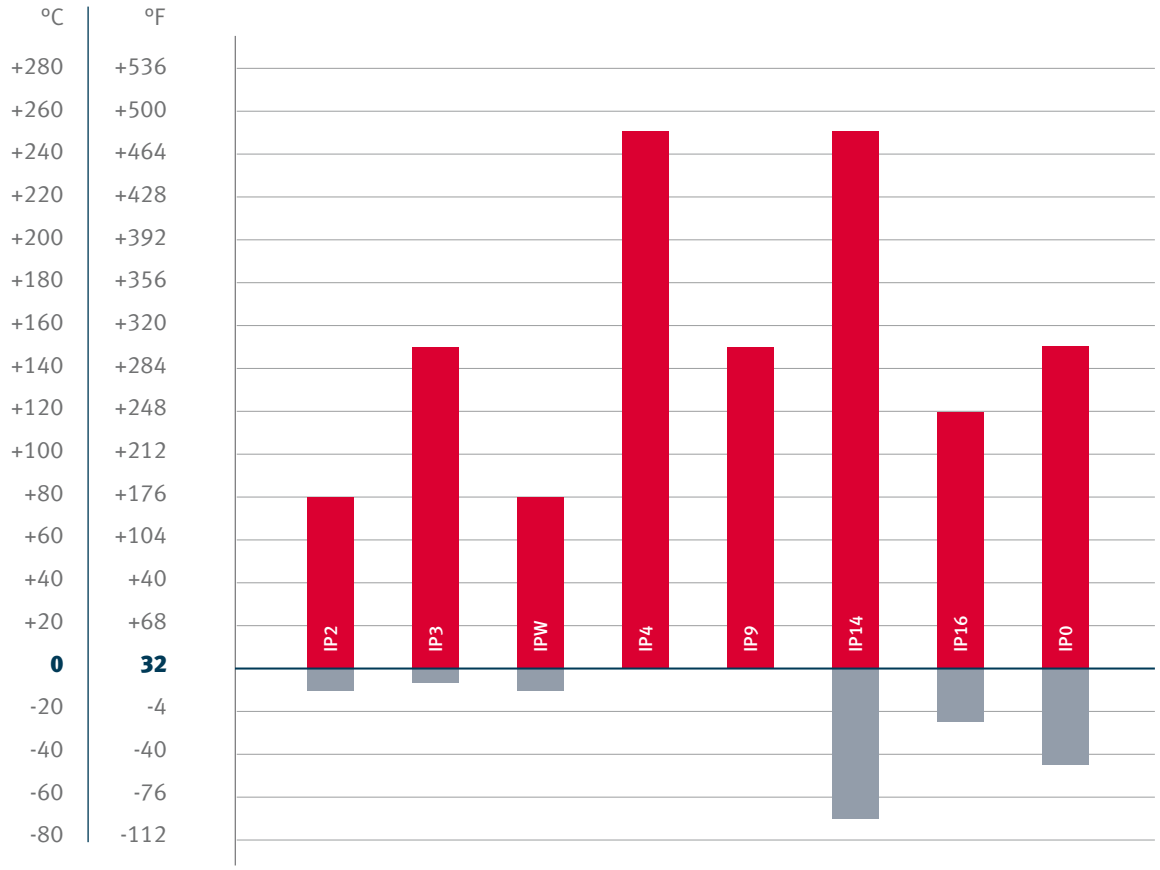

IP2

Standard lubricant with good lubricating properties and outstanding corrosion protection for all applications.

IP3

Long-life lubricant for high speeds, absolutely non-drip/non-splash.

IPW

High-adhesion, high-performance lubricant wax with extremely high wear protection that allows significantly longer relubrication intervals. Can be used without problems in dusty and powdery environments.

IP4

Thermally stable high-temperature lubricant with good protection against wear and corrosion.

IP9

Preservative corrosion protection with minimal lubricating effect.

IP14

Dry lubrication for slow-running chain drives and low to medium loads.

IP16

Food-grade lubricant with good protection against wear and corrosion. Meets the high standards of USDA-H1 and LMBG.

IP0

Low-temperature lubricant with optimum lubricating properties and consistent fluidity over the entire temperature range.

iwis Customer Service
CallBack Tel: +49 89 76909-1600 Fax: -1198
sales-muenchen@iwis.com

Lubricating the iwis® chains
Relubricants

RECOMMENDED RELUBRICANT

The life of a chain is dependent to a decisive extent on correct and adequate topping up of the lubricant. As a consequence of the oscillating movements of the chain link, the initial lubricant is used up in the course of time depending on the operating conditions. If the lubricant is topped up regularly, the chain is mainly within the range of fluid and mixed friction. An absence of lubricant or badly selected relubricants cause dry friction, which leads to the formation of fretting corrosion and increased wear of the chain.

The selection of the lubricant and the correct lubrication technique is decisive for effective relubrication.

VP6 **iwis VP6 Kombi Superplus Spray**

The iwis VP6 Kombi Superplus Spray is a high-adhesion, high temperature chain oil for diverse industrial chain applications.

Technical data:

Chemical composition	Synthetic hydrocarbon oil
Colour	Green, transparent
Viscosity	Kinematic, approx. 1800 – 2200 mm²/s (40 °C | 104 °F)
Density	Approx. 0.9 g/cm³ (20 °C | 68 °F)
Physical state	Aerosol
Operating temperature	0 °C (+32 °F) to +250 °C (+482 °F)

Advantages

- Very high temperature stability
- Low evaporation
- Very good adhesion properties
- Good penetration despite high viscosity
- Extremely high wear protection

RELUBRICANTS

should possess the following characteristics – depending on the application:

- Adhesiveness
- Compatibility with initial lubricant
- Corrosion protection
- Load-bearing capacity of lubricant film
- Ability to creep
- Lubrication of emergency running
- High viscosity and simultaneous ability to flow
- High-temperature stability
- Water-repellent
- Resistance to media etc.

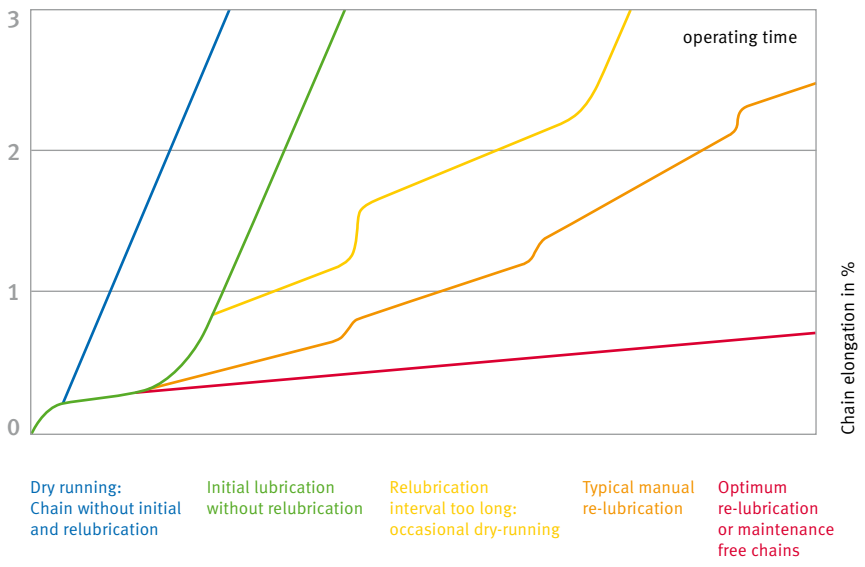

iwis Customer Service
Tel: +49 89 76909-1600 Fax: -1198 CallBack
sales-muenchen@iwis.com

iwis® Chain Engineering

Important tools for your benefit

CHAIN DESIGN

We would be happy to help you design your chain drive. Simply fill in the necessary details on our downloadable form. Then once you have completed the form, just click on the button at the bottom to send it via your e-mail client to chaindrive@iwis.com.

www.iwis.de/**chain-design**

CAD DATABASE

Download, import, go!
Our CAD Database contains 3D models (in over 30 data formats) of standard roller chains and connecting links to make design work easier for you.

www.iwis.de/**cad**

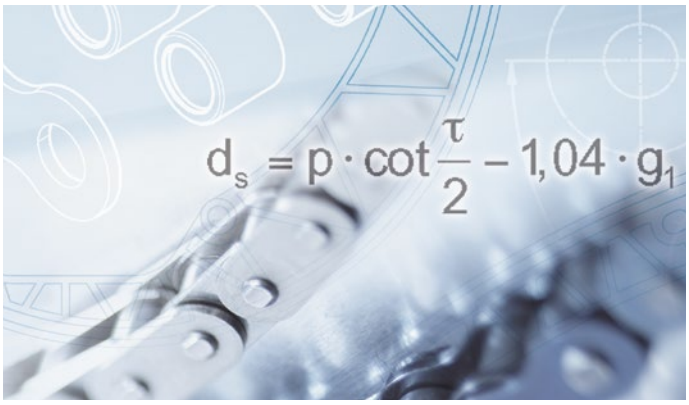

CHAIN ENGINEERING PROGRAM

iwis provides you with a special PC-Software serving as support for the specification of the individual chain drive design or rather the preselection of the appropriate chain. Please ask our Customer Service Team!

www.iwis.com/**chain-calculation**

CHAIN ENGINEERING HANDBOOK

The Chain Engineering Handbook presents a synopsis of the technical knowledge about chain drives that a designer needs for configuration of a drive system. Also contains useful calculation examples and descriptions of typical application cases.

www.iwis.de/**downloads**

iwis Customer Service
CallBack Tel: +49 89 76909-1600 Fax: -1198
sales-muenchen@iwis.com

iwis® Chain Guidelines

Which application demands which chain type?

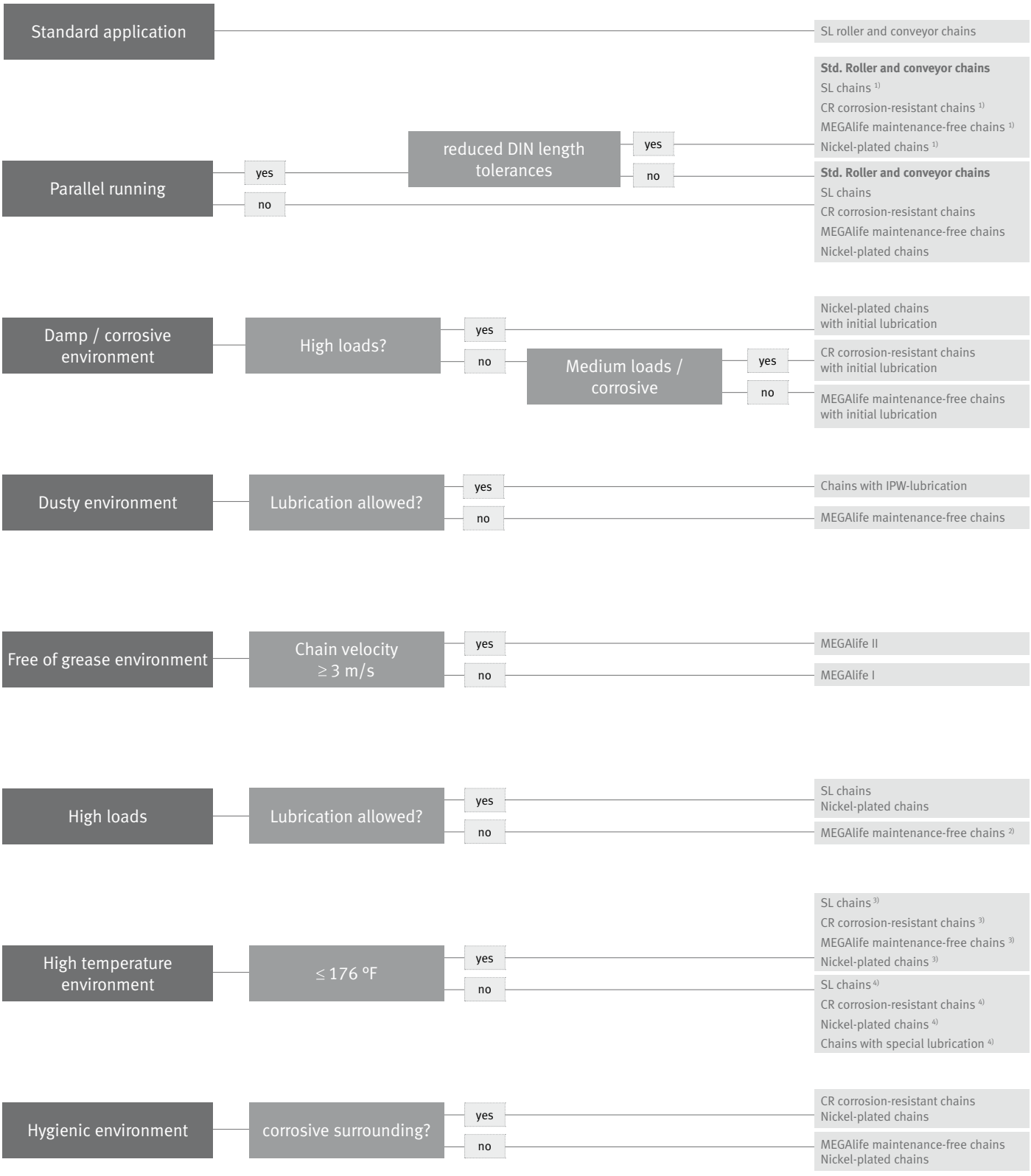

1) with reduced tolerances

2) application limited 3) with standard lubrication or IPW 4) IP up to 302 °F and IP4 up to 464 °F

iwis Customer Service
Tel: +49 89 76909-1600 Fax: -1198 CallBack
sales-muenchen@iwis.com

iwis® Chain Guidelines

Important information

IMPORTANT NOTICE

The following guidelines support you in choosing the right chain. However, please note that each application is individual. The result should in no case serve as a basis for your order. Therefore please refer to our professional employees who are happy to submit an individual order to you. We do not assume any guarantee or liability.

FOR MORE INFORMATION ON

- SL chains
  → Pages **16** to **19**
- Nickel-plated chains
  → Pages **16** to **19**
- MEGAlife maintenance-free chains
  → Page **40**
- CR corrosion-resistant chains
  → Page **66**

CHAIN FABRICATION LENGTHS

- 5 m
- 10 m
- 10 feet

Adjusted lengths can either be supplied open or closed. Special lengths (e.g. on coils) are available on request and depending on chain type.

OUR CONVEYOR CHAINS

If a parallel run is necessary, iwis can manufacture and supply chain strands with precisely harmonised lengths, bundled together and marked accordingly. This is in particular important for chains with opposite cam or angle side plates.

PRICE SUPPLEMENTS

Price supplements will be calculated for:

- adjusted lengths
- special lubrications
- reduced tolerances
- short lengths
- special coatings
- nickel-plated chains and single parts
  Prices on enquiry.

CUSTOM-MADE CHAINS

Special chains made according to customer drawings are possible. Prices on enquiry. Minimum order quantity is 50 m.

MINIMUM ORDER QUANTITIES FOR CONNECTORS AND CRANKED LINKS

Chain dimensions	Inner link / Outer link / Connecting link	Cottered Link
6 mm – 3/4"	20 ea	10 ea
1" – 1 1/4"	10 ea	10 ea
Duplex – Triplex	5 ea	5 ea
Parts over 1 1/4"	1 ea	1 ea

iwis Customer Service
CallBack Tel: +49 89 76909-1600 Fax: -1198
sales-muenchen@iwis.com

iwis
antriebssysteme
wir bewegen die welt

High Precision Chains

JWIS®

Engineering Manual

JWIS®

MEGAlife Roller Chains

JWIS®

Transfer Chains

JWIS®

Spike Chains

JWIS®

Flat Top Chains

FLEXON®

Drive and Conveyor Chains

EUROCHAIN® powered by iwis

Sprockets and
Drive Components

Roller- and Conveyor Chains

ELITE®

Agricultural Chains

ELITE®

All product catalogs and flyers, as well as our iwis Engineering Manual can be downloaded on our website: **iwis.com/catalogs**

Our subsidiaries

Germany

iwis antriebssysteme GmbH & Co. KG
Albert-Roßhaupter-Straße 53
81369 München
Tel. +49 89 76909-1500
Fax +49 89 76909-1198
sales@iwis.com

Germany

iwis antriebssysteme GmbH
Essener Straße 23
57234 Wilnsdorf
Tel. +49 2739 86-0
Fax +49 2739 86-22
sales-wilnsdorf@iwis.com

Germany

iwis agrisystems
Schützenweg 5
36205 Sontra
Tel. +49 5653 9778-0
Fax +49 5653 9778-26
agrisystems@iwis.com

Great Britain

iwis drive systems Ltd.
Unit 8c Bloomfield Park
Bloomfield Road, Tipton
West Midlands, DY4 9AP
Tel. +44 12 15213600
Fax +44 12 15200822
salesuk@iwis.com

France

iwis systèmes de transmission
10, rue du Luxembourg
69330 Meyzieu
Tel. +33 4374515-70
Fax +33 4374515-71
salesfr@iwis.com

Switzerland

iwis AG Kettentechnik
Bahnweg 4 (Postfach)
5504 Othmarsingen
Tel. +41 62 8898999
Fax +41 62 8898990
info@iwis-ketten.ch

Italy

iwis antriebssysteme Italia
Tel. +39 340 9296142
Fax +49 89 7690949-1726
salesit@iwis.com

China

iwis drive systems (Suzhou) Co., Ltd.
No. 266 LvliangShan Road
215153 Suzhou SND
Tel. +86 512 8566-3020
Fax +86 512 8566-3009
salescn@iwis.com

USA

iwis drive systems, LLC
Building 100, 8266 Zionsville Road
Indianapolis, IN 46268
Tel. +1 317 821-3539
Fax +1 317 821-3569
sales@iwisusa.com

Canada

iwis drive systems, Inc.
101-19097, 26th Avenue,
Surrey BC V3Z 3V7
Tel. +1 604 560-6395
Fax +1 604 560-6397
salesca@iwisusa.com

Brazil

iwis Sistemas de Transmissão
de Energia Mecânica Ltda.
Rua Bento Rosa, nº 1816
Bairro Hidráulica
95.900-000 Lajeado, RS
Tel. +55 51 3748-7402
salesbrazil@iwis.com

South Africa

iwis drive systems, (Pty) Ltd
Unit 3, 127 Koornhof Road
Meadowdale, 1613
Tel. +27 11 392-2306
Fax +27 11 392-3295
salessa@iwis.com

Czechia

iwis antriebssysteme spol. s r.o.
Písecká 893
38601 Strakonice
Tel. +420 383 411811
Fax +420 383 321695
salescz@iwis.com

Turkey

iwis tahrik sistemleri sanayi ve ticaret ltd.şti
Kağıthane Merkez Mah. Bağlar Cad. No: 14
Kağıthane Ofis Park 4C-Blok, TT04-FF2
34406 Kağıthane-İstanbul
Tel. +90-212-939 3843
Fax +90-212 939 3701
salestr@iwis.com

www.iwis.com

Your sales representative

DRIVE SYSTEMS
+61 (0) 3 9759 7100
info@drivesystems.com.au
drivesystems.com.au
Supply & Service of Mechanical Power Transmission Products

iwis
antriebssysteme
wir bewegen die welt