10 | 2015

MagLine | Magnetic Length and Angle Measurement Systems

MagLine Micro
MagLine Basic
MagLine Macro
MagLine Roto

DRIVE SYSTEMS

SIKO

5.0 | Overview

Measurement technology since 1963	4
Product overview	6
Technical details	10
Function and benefit	13

5.1 | MagLine Micro 15
5.2 | MagLine Basic 49
5.3 | MagLine Macro 125
5.4 | MagLine Roto 145
5.5 | Accessories 183
5.6 | Appendix 195
5.7 | Product index, contact information 203

5.0

With a clear vision for the future!

Today SIKO can look back over five decades of experience in the production of measuring instruments for length, angle and speed measurement as well as the measurement of tilt angles and speed. With these core competencies as its foundation, SIKO develops and produces measuring instruments and positioning systems for automation and manufacturing processes that are geared to the future.

The highest demands of our customers from the industry and the mechanical engineering sector are more than met by the quality, precision and functionality of our products and services.

SIKO is certified to DIN EN ISO 9001 : 2008. In our company sustainable use of resources is a matter of course.

Six product ranges - a wide portfolio for very different measuring assignments

The SIKO product portfolio comprises a total of six ranges,
including high-quality measuring instruments and positioning systems for the industry and the
mechanical engineering sector.

We develop sensor systems for measured value acquisition either for you or in collaboration with your company. Shorter tooling times and the optimization of manufacturing and production processes are often the centre of focus.

OEM customers, projects and special solutions, retrofits or spare parts supplies directly to end users - all our customers are important!

6 distinctive product lines	
PositionLine	mechanical and electronic position indicators, handwheels with analog displays, adjustment buttons
RotoLine	magnetic and optical rotary encoders, geared potentiometers
LinearLine	wire-actuated encoders, optical distance sensors
DriveLine	actuators
MagLine	magnetic length and angle measuring systems
OptoLine	high-precision optical sensors

Global success is never coincidental

Today the robust and innovative SIKO measuring instruments are in use in industrial and mechanical engineering installations around the world.

Five SIKO subsidiaries are at your disposal in the following countries:

- U.S.A.
- Italy
- Switzerland
- China
- Singapore

In addition, around 60 national and international agencies are on the spot for direct customer contact and technical support. Sales engineers and service technicians support OEM customers as well as users at their own facilities, providing competent advice and services in the respective national languages.

Horst Wandres & Sven Wischnewski | Management of SIKO GmbH

Economical solutions and innovative technologies for industrial applications

The MagLine range is a classic example of SIKO's innovative power. The systems are based on the magnetic measurement principle.

Special benefits of MagLine:
- Completely wear-free
- Insensitive to dust, shavings, humidity, oil, fat, etc.
- Very robust with shock and vibration
- No measurement errors caused by gear ratios or gear backlash
- High system accuracy and reproducibility
- Easy handling and mounting

5.0

The challenges faced by measuring devices in extreme industrial conditions make great demands on their reliability and reproducibility. MagLine systems are mainly used for extremely precise tracking of linear and radial positions as well as speeds and angles. The contactless technology demonstrates its advantages in all kinds of applications, such as motor feedback or highly dynamic processes in particularly dirty environments.

Since its introduction, MagLine has undergone continuous further development. Four product families provide a general overview: Micro, Basic and Macro for linear length measurement and Roto for angle and speed measurement.

What is the measurement assignment? The following selection criteria indicate the right MagLine system solution:
- Linear or rotating applications
- Incremental/absolute processes
- System accuracy and reproducibility requirements
- Integration into upstream control systems or independent measuring systems

Featuring a constantly expanding spectrum of components in various specifications, MagLine is designed for a number of special tasks. The technology offers future-oriented, extremely versatile and flexible measuring solutions, which are easily integrated and can be continually extended in line with customers' requirements.

Its easy handling and mounting have won MagLine a reputation as a paticularly customer-friendly product line which is universally durable and economical.

Magnetic encoding

The SIKO magnetic bands (flexible steel strips with a magnetic layer) are manufactured precisely and with great care. The bands are equipped with one or more magnetic code tracks in specially developed processes.

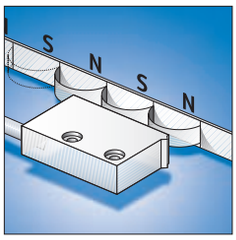

MagLine works in accordance with the principle of contactless scanning of magnetic fields and converts the measured values into digital or analog signals.

The scanning principle is determined by this encoding. Incremental encoding serves for robust and all-round solutions with which, for example, flexible magnetic bands can be individually cut to length before self-adhesive mounting.

The absolute encoding of the band material ensures that the system features a particularly high standard of reproducibility and measuring reliability. Its easy handling and mounting have won MagLine a reputation as a particularly customer-friendly product line, which is universally durable and economical. After power interruptions, for example when the system is switched off and on once more, the actual position value is determined and converted, even if the sensor position has changed in the meantime.

Incremental and absolute encoding methods enable position tracking with different forms of feedback which can be evaluated in various ways (see diagram)

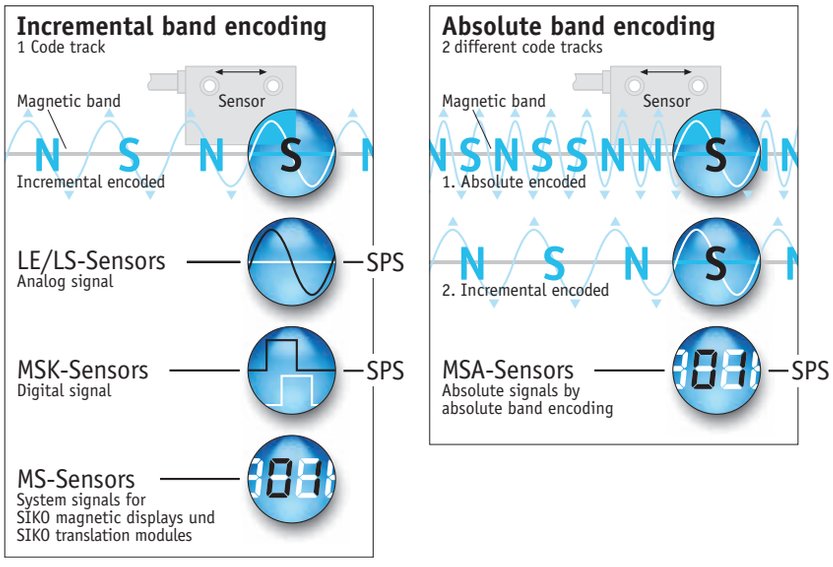

Applications

MagLine systems can be mounted directly on positioning or processing equipment, preventing measurement errors which can occur as the result of gear unit play or spindle tolerances.

The reading distance (sensor/band gap) has a wide tolerance range. This can vary over the whole measuring range and within the defined limits (e.g., due to radial run-out or imprecise guides). Accuracy and reproducibility of the position values are not negatively affected as a result.

The robust measuring equipment is impervious to dirt and mechanical loads in industrial environments. The main advantage is the magnetic measurement method itself, as its principle of operation cannot be negatively affected by typical machine-related effects (vibration, shock), or other influences (bulk solids or fluids).

Demanding conditions require tough equipment. The long service life and durability of the materials and functional units used guarantee maximum reliability. The flexible magnetic bands can also be additionally protected with a stainless steel cover strip to withstand mechanical effects if necessary.

The sensor system itself does not have any moving parts, as the electronics are fully encapsulated. Tough plastic or all-metal housings are generally used for this.

MagLine Micro

This high-resolution linear measuring system was designed for precise and highly-dynamic processes with special requirements regarding measurement in the µm range. The primary applications are in linear and rotary control and drive systems.

With a maximum measuring length of 90 m, MagLine Micro achieves a resolution of 0.2 µm. All main parameters can be freely selected and enable individual adaptation to site requirements. The measurements made by this sensor-band combination are made available in the form of digital square-wave or analog signals. The measuring ranges can be tracked either incrementally or absolutely.

MagLine Micro systems are an inexpensive alternative to conventional length measurement systems, e.g., using optical methods, yet have a wider range of functional applications due to their robust design and resistance to ambient conditions.

MagLine Micro
Resolution: standard 1 µm, max. 0.2 µm
System accuracy ±10 µm
Repeat accuracy of ±1 µm
Sensor/band gap max. 0.4 mm

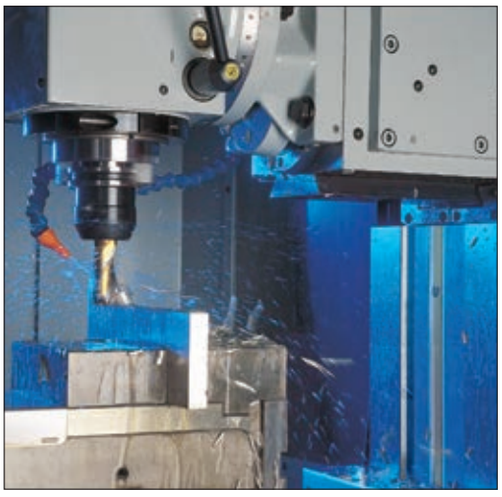

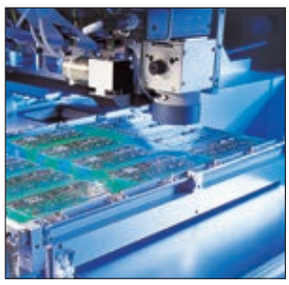

Reliable high-precision measurement and position tracking is still possible even under particularly difficult ambient conditions.

MagLine Basic

Track-proven and mature, the Basic range features an especially wide range of components for incremental or absolute measurement. The system's resolution makes it suitable for measurements right down to the µm range.

Basic is the MagLine product family with the most comprehensive range. It offers economical solutions for industrial applications, which do not require a very high resolution for measuring accuracy. The system is ideal, for example, for applications in the wood, metal or stone processing industries and also for machines for glass and plastic processing.

Applications using Basic components benefit from its precise, robust measuring methods and matching sensors, with and without integrated translation module.

The versatility of this range is also demonstrated in a series of ready-to-use products. The sensor-display combinations are ready to be fitted with the appropriate self-adhesive band and installed at the desired measuring point. A reliable measuring system can therefore be simply mounted, for example for the length limit stops on a saw.

All measured values can be displayed directly or converted by other controllers for further processing. The Basic series also features interfaces for integration into almost any industrial environment.

MagLine Basic
Resolution: standard 10 µm, max. 1 µm
System accuracy ±25 µm
Repeat accuracy ±10 µm
Sensor/band gap max. 2 mm

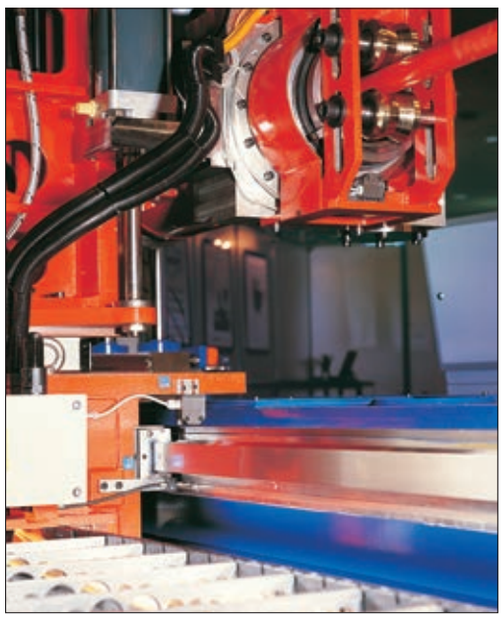

Incremental and absolute position tracking with compatible electronics for connection to controllers or for direct on-site indication.

FELDER KG, Österreich

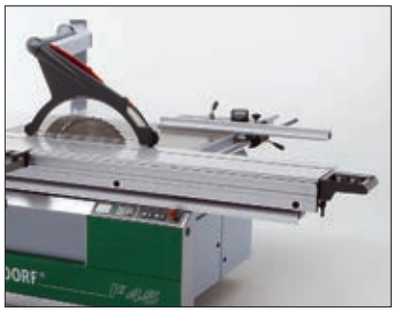

Wilhelm Altendorf GmbH & Co. KG

MagLine Macro

Macro is specially designed for very long distances with both absolute and incremental measurement. The systems provide a reading distance of up to 20 mm, e.g., to compensate for height variations, and accuracy data also designed for particularly long tracking paths e.g., in storage and conveying technology.

Standardized interfaces allow problem-free integration in controls. Central setting and monitoring is, for example, particularly important in stage and studio applications. MagLine Macro ensures reliable position tracking down to the last millimeter with the complex interaction of a number of moving units.

As the sensors are fully encapsulated, MagLine Macro is suitable for use in extreme conditions such as stone processing. The advantages of the high protection category (IP67) and its resistance to even extremely dirty conditions are fully revealed in such applications.

MagLine Macro
Resolution: standard 1 mm, max. 0.25 mm
System accuracy ±1 mm
Repeat accuracy of ±1 mm
Sensor/band gap max. 20 mm

The compact design of the scale and corresponding sensors permits simple and inconspicuous integration into almost any guide unit.

MagLine Roto

The Roto range is an ideal alternative to conventional optical encoder systems, especially when exact speed or angle measurement is required under difficult ambient conditions such as on balancing machines. The system even runs reliably in an oil bath, for example in a hydraulic pump.

Durability is also a feature of the Roto principle: The contactless measuring principle is also advantageous for elevators, as the extreme mechanical stresses in long-term operation are not transmitted to the measuring system.

MagLine Roto
Max. resolution 200 000 pulses/revolution
System accuracy ±0.1°
Repeat accuracy of ±1 increment
Sensor/band gap max. 2 mm

Extremely robust and designed for direct angle and speed measurement – the typical applications of MagLine Roto profit in more ways than one from the contactless magnetic measuring processes.

The magnetic measurement principle

The core element of magnetic linear measurement is a permanently mounted magnetic band (also called the scale). This band is scanned by a magnetic sensor which forwards the information either to an electronic evaluation system, a higher-level controller (PLC) or directly to a connected magnetic display.

The actual magnetic linear measurement is based on the changes in resistance by magnetic effects. The magnetic bands used are encoded by SIKO in specially developed processes.

These encoded scales are scanned by contactless sensors. The integrated electronic system converts the measured values into digital or analog signals for further processing, for example by controllers or a corresponding SIKO indicator.

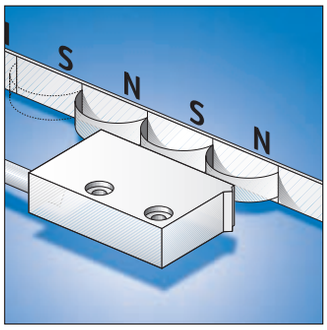

A sensor registers the magnetically encoded path information and converts this to standardized interface signals for subsequent processing.

5.0

Incremental and absolute processes – the difference

Magnetic linear measurement is performed either incrementally, quasi-absolutely or true-absolutely.

Incremental method
In incremental systems the magnetic band is magnetized at regular intervals with north and south poles, and the pole length also determines the maximum resolution and system accuracy. If the sensor is moved over the band, the periods generate the path information which is processed in the form of square-wave signals (counting pulses). Counting of the pulses provides information on the traveled path.

In an incremental system at least one absolute reference is necessary – the so-called reference point. This point serves for re-orientation of the system and can be stored on the magnetic band as additional information. This reference point is also of importance due to the fact that the actual position value is generally lost in an incremental system if the power supply is interrupted (e.g., if the system is switched on and off) and if the sensor position has been changed in the meantime. A new referencing operation is then necessary.

Incremental to absolute measurement

The system requires re-referencing if ...

Scanning method	Band type	Power interruption	Sensor/band reading distance exceeded
incremental		yes	yes
quasi-absolute	+ -	no	yes
true-absolute		no	no

- A “quasi-absolute” measurement is achieved by buffering the measured data by means of a battery. Movement of the sensor along an incrementally encoded band is recognized even in a currentless state. Referencing is only necessary if the sensor exceeds the maximum band distance.
- A “true-absolute” measurement is achieved when the magnetic strip is encoded absolutely, thus enabling all currentless movements of the sensor/band to receive an absolute position signal direct from the magnetic band when the system is switched on.

The quasi-absolute method
This method is based on incremental measuring methods. The measured values are buffered in a system-related electronic evaluation unit so that they are available as absolute values. An integrated battery ensures that currentless motion is also recognized. The specially developed lowest-power technology enables reliable operation for up to 10 years without changing the battery.

When installing battery-buffered systems, the prescribed maximum reading distance between the sensor/band must not be exceeded, otherwise measurement information can be lost even with this method. If this is the case, a reference operation is necessary.

The true-absolute method
Reference operations are not necessary for linear measurement with absolute encoded magnetic strips. The flexible plastic strip is magnetized with a special absolute code. Commissioning is performed by one-time alignment and calibration of the system. Due to the absolute encoding of the band, no buffer battery is necessary and the current position value is immediately available when the system is switched on.

Even a change in position in a non-powered condition does not affect the accuracy of the displayed measured value, because the position is stored at each point on the encoded magnetic strip. A reference operation is also unnecessary, for example, if the sensor is lifted from the magnetic band for maintenance purposes.

In summary

Each of the measuring methods described above has its advantages. A decision on whether an incremental process is preferable for economic reasons or the absolute process for time and safety reasons can be made once the details of the respective system and application are known.

Path and angle measurement is a standard assignment in mechanical and plant engineering. The SIKO MagLine products have been in use for many years with modern, track-proven solutions. Irrespective of whether an incremental or absolute process is employed, the contactless measuring principle is by far superior in many applications to conventional solutions such as rotary encoders with rack and pinions, wire-actuated encoders or optical systems due to its extreme robustness.

When measurement is required over long distances with a high degree of accuracy and simple handling, MagLine is always an economical solution for a number of tasks. All standard interfaces for connection to control, regulation and bus systems are available.

Incremental systems: Reference signals of sensors and magnetic bands

1. A **sensor with the code "0"** (without index) is only equipped with one sensor element which measures length. A sensor version without index runs, for example, with MB500/1 incremental (one track).

2. A **sensor with the code"I"** (index signal) is also only equipped with one sensor element which measures length. With an additional electronic system an index signal is generated by the sensor for each period. A second track on the band is not necessary to generate such a signal. This sensor type therefore also runs with MB500/1 incremental (one track).

3. A **sensor with the code "R/RB"** (one-time or periodical reference point) is equipped with an additional sensor element which scans a second track parallel to the first track on the band. MB500/1 (2 tracks) with reference point code E (once) or P (periodically) is used, for example, for this sensor. In addition the position of the reference signal on the band must be determined (refer to the data sheet of the respective magnetic band).

Diagram to sections 1./2.

If a **sensor** has the **code I/0**, it works with ...

MB code **O** (without reference point/1 trrack)

Diagram to sections 3.

If a **sensor** has the **code R/RB**, it works with ...

MB code **E** (single reference point/2 tracks)

MB code **P** (periodical reference point /2 tracks)

Options for referencing an incremental system

1. **You are using a system comprising a sensor without reference signal and a magnetic band with one track**

The system can be either referenced by moving to a defined position – e.g., a stop block - or by linking a certain position with an external encoder (limit switch, light barrier, etc.). Problem: Depending on the version of the stop block or the external encoder, the repeat accuracy of this method is insufficient.

2. **You are using a system comprising a sensor with the index signal "I" and a magnetic band with one track**

With this version you link an external encoder (limit switch, light barrier, etc.) with an index signal which the sensor emits with each magnetic period. The only function of the external encoder is to determine the correct period. The accuracy of referencing corresponds to the repeat accuracy of the sensor (refer to the respective sensor data sheet). The following must be observed:

- Referencing can be performed at any point of the traveling path.
- The switching path of the external encoder must be shorter than that of the distance between the index pulses.
  Note: On the MB500/1 the index pulse distance is 5 mm, on the MB100/1 only 1 mm.

3. **You are using a system comprising a sensor with the reference signal "R/RB" and a magnetic band with two tracks** (one-time/periodical reference point, magnetized on the second track)

On this version an external encoder is normally not necessary, referencing is only performed with the reference signal of the sensor. Realignment can only be performed at the point at which a corresponding reference point is magnetized onto the band.

With long measurement distances, it is recommended to work with periodical reference points if necessary and to identify these with external encoders. Referencing is performed with the repeat accuracy of the sensor (refer to the respective sensor data sheet).

Sensor with code I without reference point/1 trrack

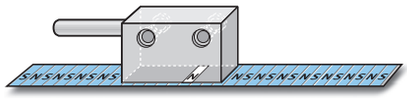

Sensor with codew R/RB with 1 or x reference point(s)/2 tracks

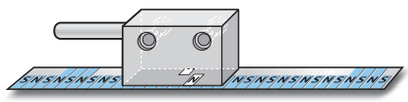

Environmental conditions	Examples of use	Benefits

MagLine Micro
max. resolution 0.2 µm

This system is impervious to outside influences, and the system provides extremely high resolutions.

- High resolution
- Incremental/absolute

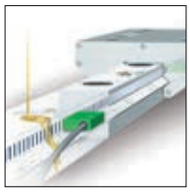
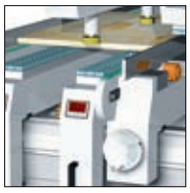

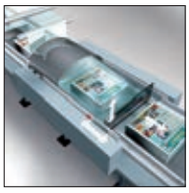

E.g., linear drives with dowel drilling systems, parquet manufacture, tubular film packaging ...

MagLine Basic
max. resolution 1 µm

Unshakeable all-rounder with a number of incremental and absolute components. The special feature: Ready-to-use solutions with indicators and connected sensor.

- Versatile system
- Easy mounting
- Ideal for retrofitting

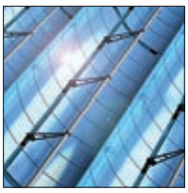
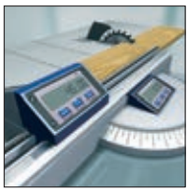
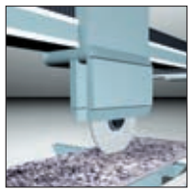

E.g., CT patient tables, mirror adjustment (solar power plants), sliding table saws, stone cutting ...

MagLine Macro
max. resolution 0.25 mm

Especially height-tolerant magnetic measurement system with sensor/band gap of max. 20 mm; therefore, ideally suited for extreme applications (stone processing).

- High resolution with very long measurement paths
- High protection category (IP67)

E.g., stage technology, forklifts, waste and scrap presses, stone cutting ...

MagLine Roto
max. resolution 0.001°

Roto enables particularly durable angle or speed management, as the contactless measuring method physically separates the Roto sensor from the band or ring.

- Highl operational safety
- Long service life
- High protection category (IP67)

E.g., wind energy plants, elevator technology, tube bending technology, access control ...

5.0

5.1

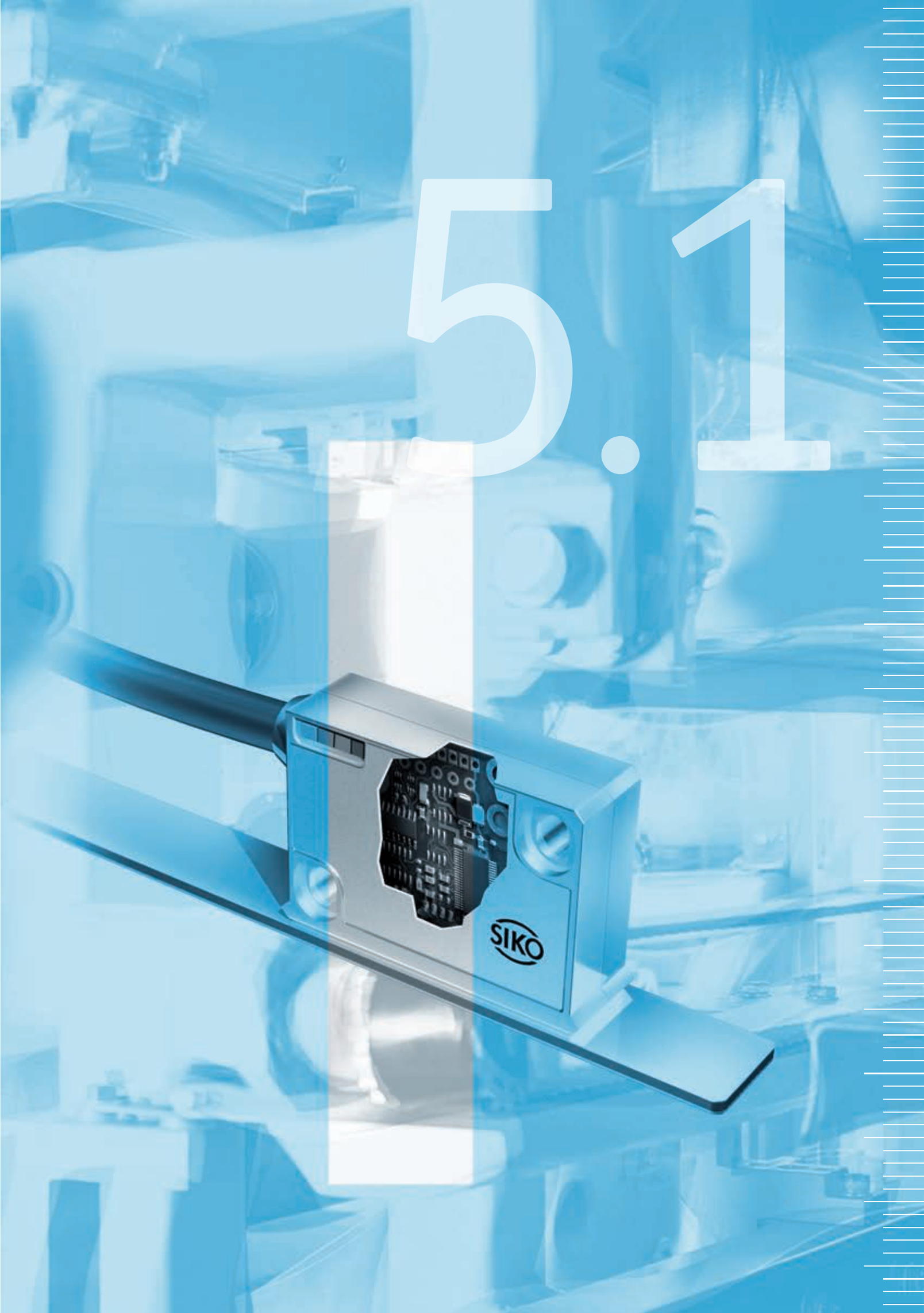

5.0 | Overview 3

5.1 | MagLine Micro

Quick start, technical details		16
Product matrix		17
Products	MB100/1	18
	MSK1000	20
	LE100/1 linear	24
	LS100	28
	MS100/1	31
	MA100/2	33
	MBA110	36
	MBA111	38
	MSA111C	40
	ASA110H	43

5.2 | MagLine Basic 49
5.3 | MagLine Macro 125
5.4 | MagLine Roto 145
5.5 | Accessories 183
5.6 | Appendix 195
5.7 | Product index, contact information 203

Introduction

The MagLine Micro operates in the µm range and was especially designed for precise and highly dynamic processes on linear and rotary guide and drive systems with their high demands regarding value tracking. With its very high-resolution magnetic measurement the MagLine Micro is available as either an incremental or absolute scanning system with configurable resolutions of up to 0.2 µm and a measuring accuracy of up to 10 µm.

- Incremental and absolute measurement method
- Max. resolution 0.2 µm
- Repeat accuracy max. 1 µm
- Accuracy class up to 10 µm

Product Matrix for the overall system

Whether you need a new system or are retrofitting an existing system – with its simple handling and installation the contactless measuring system can also be integrated into existing measuring environments. With MagLine Micro you combine fully coordinated components such as sensor, magnetic band and display or electronic evaluation system to create a complete system which is unsurpassed when it comes to wear-free operation, robustness and economy.

Magnetic bands
Measuring length up to 100 m
Accuracy class up to 10 µm

Sensors
Analog interface 1 V_{SS}
Maximum tolerance of reading distance to scale 0.4 mm

Translation module
Real-time signal processing
Resolution 0.2 µm

Magnetic displays
Direct display
Resolution and repeat accuracy up to 1 µm

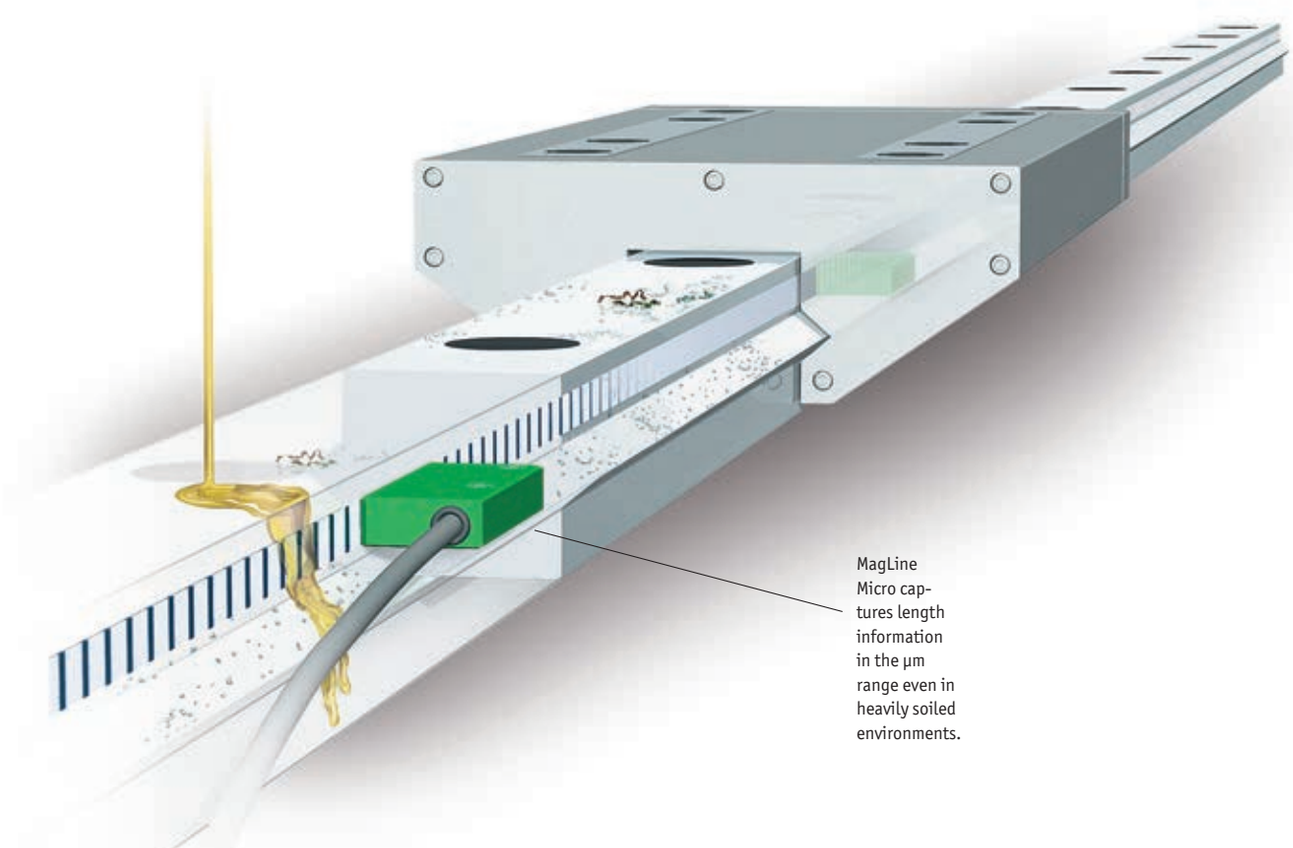

MagLine Micro captures length information in the µm range even in heavily soiled environments.

MagLine Micro

Signal analysis via	Incremental systems			Absolute systems		
	Output, digital	Output, analog		Magnetic display	Sensor	Translation module
System accuracy class [µm]	±10	±10	±10	±10	±10	±10
Maximum repeat accuracy [µm]	±1	*)	*)	±1	±1	±5
Maximum measurement length/magnetic display [m]	infinite	infinite	infinite	±9.999.999	4.0	4.0
Maximum reading distance [mm]	0.4	0.4	0.4	0.4	0.2	0.4

Resolution max. in µm	Supply voltage	Output/ interface	Magnetic sensor	Page	
0.2	6.5 ... 30 V DC 4.75 ... 6 V DC	LD	**MSK1000**	20	
*)	10.5 ... 30 V DC 5 V DC	1 V_{SS}	**LE100/1**	24	
*)	24 V DC 5 V DC	1 V_{SS}	**LS100**	28	
*)	feed via down-stream elec-tronics unit	—	**MS100/1**	31	
1	4.5 ... 30 V DC	1 V_{SS}, SSI, RS485	**MSA111C**	40	

			Magnetic display		
1	24 V DC 230 V AC 115 V AC	RS232, RS485	**MA100/2**	33	

			Translation module		
1	24 V DC	1 V_{SS}, LD, SSI, RS485	**ASA110H**	43	

Width in mm	Accuracy class in µm	Available length max. in m/piece	Magnetic band		
5 or 10	10 or 50	4 (10 µm) 100 (50 µm)	**MB100**	18	
10	50	4	**MBA110**	36	
10	10	4.07	**MBA111**	38	

*) depends on the downstream electronics

5.1

Magnetic band MB100/1
Incrementally coded scale, 1 mm pole length

Profile

- Easy adhesive mounting, self-assembly possible
- Reels up to 100 m available
- 1 mm pole length
- System accuracy up to 10 µm

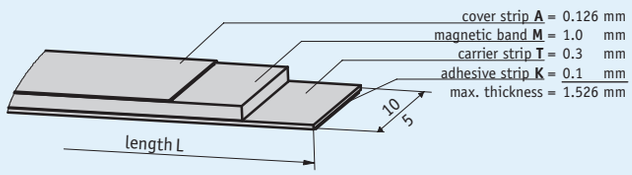

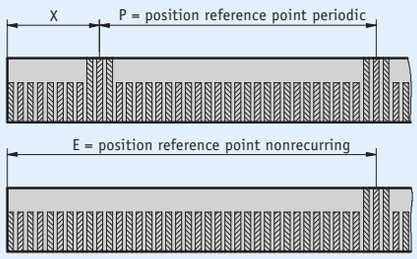

Mechanical data

Feature	Technical data	Additional information
Material	stainless steel	cover strip
Band width	10 mm or 5 mm	
Band thickness	1.4 mm	without cover strip
Mounting type	adhesive connection	double-sided tape premounted
Accuracy class	10 µm or 50 µm	

- **Measurement table of reference points**

Reference points [m]	
Fixed distance **X**	0.02
Periodic **P**	0.02, 0.08, 0.1, 0.2, 0.25, 0.32, 0.5
Onetime **E**	0.02, 0.06, 0.1, 0.2, 0.3, 0.42, 0.5

System data

Feature	Technical data	Additional information
Pole length	1 mm	
Measuring range	∞	

Ambient conditions

Feature	Technical data	Additional information
Ambient temperature	-20 ... 70 °C	
Storage temperature	-40 ... 70 °C	
Expansion coefficient	(11 ±1) x 10^{-6}/K	spring steel
	(16 ±1) x 10^{-6}/K	stainless steel
Relative humidity	100 %	condensation admissible

Order

Ordering information

The necessary tape length is calculated from:
Measured distance + sensor length "S" + (2 x forerun or overrun "B", resp.)

S	see the drawing of the sensor used
B	10 mm (forerun and overrun)

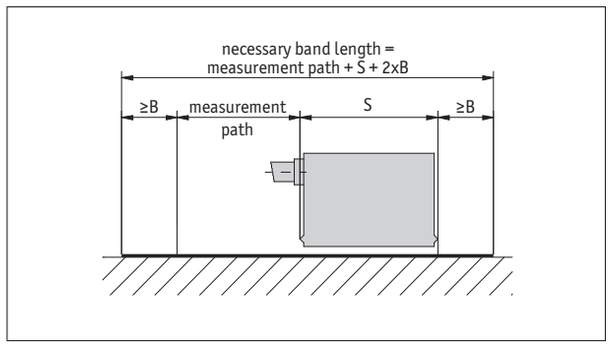

Symbolic representation

Ordering table

Feature	Ordering data		Specification	Additional information
Length	...	A	000.10 ... 100.00 m, in intervals of 0.1 m	ordering detail, see "Ordering information"
Width	10	B	10 mm	
	5		5 mm	
Accuracy	0.01	C	0.01 mm	deliverable length max. 4.0 m
	0.05		0.05 mm	deliverable length max. 100 m
Material carrier tape	St	D	steel	
	VA		stainless steel	
Adhesive carrier tape	TM	E	with	
	T0		without	
Cover strip	AM	F	with	
	A0		without	
Reference point	0	G	without	
	E		unique	only with 10 mm width
	P		periodic	only with 10 mm width
Reference point position	...	H	0.02, 0.06, 0.1, 0.2, 0.3, 0.42, 0.5 in m	indicate only if reference point E is chosen, ≤5.0 m
	...		0.02, 0.08, 0.1, 0.2, 0.25, 0.32, 0.5 in m	indicate only if reference point P is chosen
			others on request	

Order key

MB100/1 - [A] - [B] - [C] - [D] - [E] - [F] - [G] - [H]

Scope of delivery: *MB100/1*

Additional information:
Quick start, technical details *page 16*
Product overview *page 6*

subject to technical alteration • 2015/10/09 • 10:25 • K

Magnetic sensor MSK1000
Incremental, digital interface, resolution 0.2 µm

Profile

- Max. resolution 0.2 µm
- Repeat accuracy ±1 µm
- Status LED display
- Reading distance ≤0.4 mm
- Robust metal housing

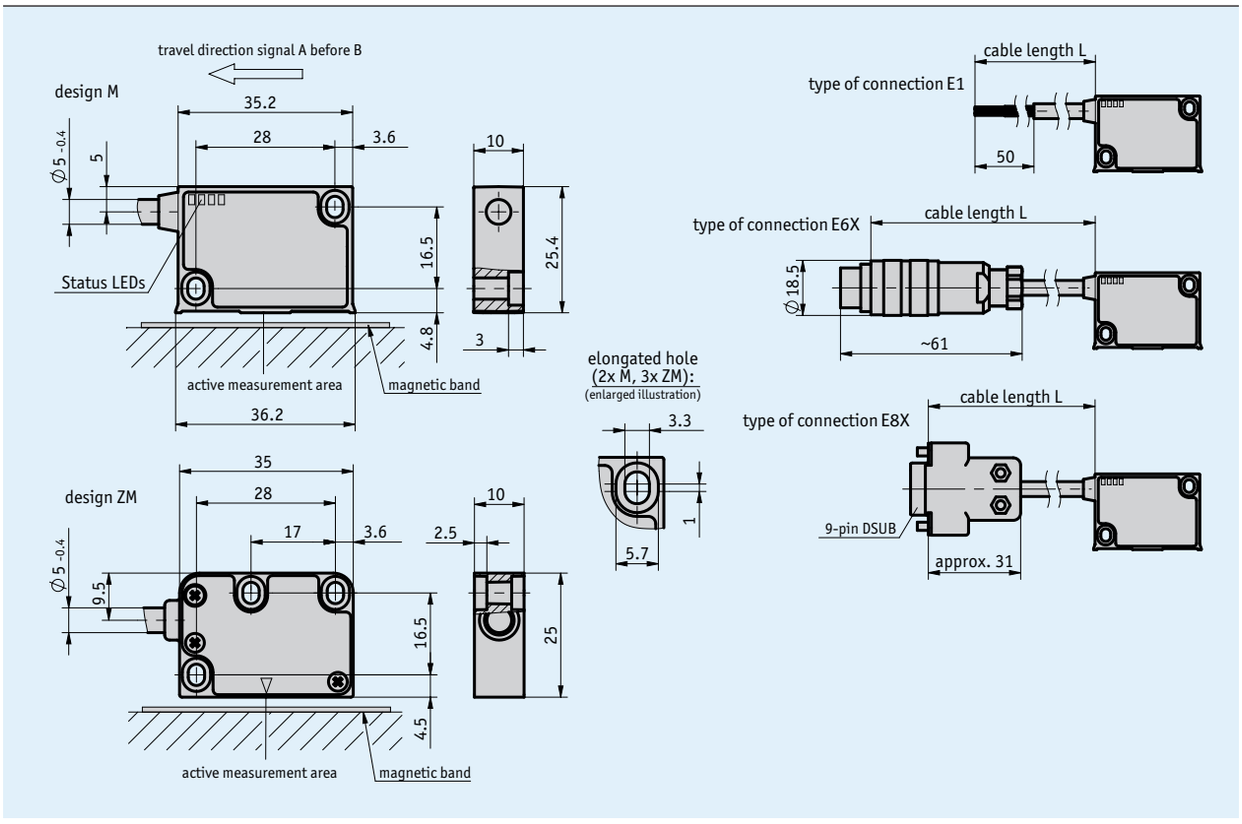

Mechanical data

Feature	Technical data	Additional information
Housing	zinc die-cast / aluminum	M design: aluminum front cover
	zinc die-cast	ZM design
Sensor/band reading distance	0.1 ... 0.4 mm	0, I reference signals
	0.1 ... 0.2 mm	RB reference signal
Cable sheath	PUR suitable for drag-chain use	6, 8-wire ø5$_{-0.4}$ mm

Travel speed

		Travel speed Vmax [m/s]			
Resolution [µm]	**0.2**	0.64	0.32	0.16	0.08
	1	3.20	1.60	0.80	0.40
	2	6.40	3.20	1.60	0.80
	5	16.00	8.00	4.00	2.00
Pulse interval [µs]		0.25	0.50	1.00	2.00
Counting frequency [kHz]		1000.00	500.00	250.00	125.00

Electrical data

Feature	Technical data	Additional information
Operating voltage	6.5 ... 30 V DC	reverse polarity protected
	4.75 ... 6 V DC	no reverse polarity protection
Current consumption	<25 mA	unloaded
Output circuit	LD (RS422)	
Output signals	A, /A, B, /B, I, /I or R, /R	
Output signal level high	>2.5 V	
Output signal level low	<0.5 V	
Pulse width of reference signal	1 or 4 increment(s)	
Real-time requirement	speed-proportional signal output	
Type of connection	open cable end	
	plug connector	7/8-pole
	D-Sub	9-pole

Signal pattern

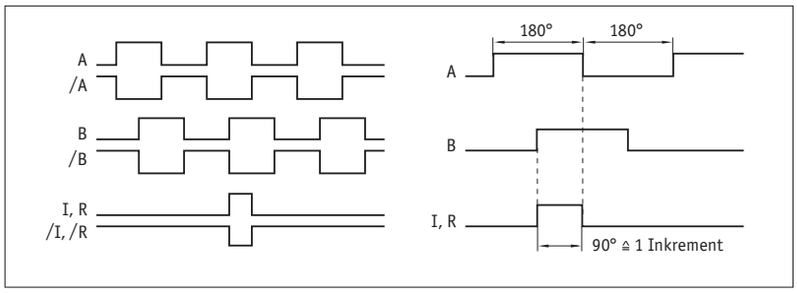

The logical condition of signals A and B is not defined in reference to the index signal I or the reference signal R. It can deviate from the signal form.

Reference or index signal with 4 increments (360°) signal length is only valid from the 5th counting step onwards. A corresponding delay should be taken into consideration after switching on the operating voltage.

Pulse interval

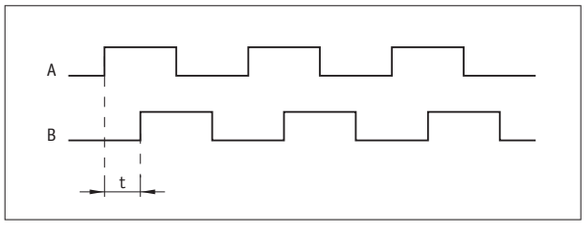

Example: Pulse interval t = 1 µs
(i. e., the downstream unit must be able to process 250 kHz)

Formula for counting frequency $= \frac{1}{1\ \mu s \times 4} = 250\ kHz$

System data

Feature	Technical data	Additional information
Resolution	0.2, 1, 2, 5 µm	
System accuracy	±10 µm	
Repeat accuracy	±1 µm	
Measuring range	∞	
Travel speed	depending on resolution and pulse interval	see table

Ambient conditions

Feature	Technical data	Additional information
Ambient temperature	-10 ... 70 °C	
Storage temperature	-30 ... 80 °C	
Relative humidity	100 %	condensation admissible
EMC	EN 61000-6-2	interference resistance / immission
	EN 61000-6-4	emitted interference / emission
Protection category	IP67	EN 60529
Shock resistance	500 m/s^2, 11 ms	EN 60068-2-27
Vibration resistance	100 m/s^2, 5 ... 150 Hz	EN 60068-2-6

Pin assignment

Inverted without reference signal

Signal	E1	E6X	E8X
A	red	1	1
B	orange	2	2
nc		3	3
+UB	brown	4	4
GND	black	5	5
/A	yellow	6	6
/B	green	7	7
nc			8
nc			9

Inverted with reference signal

Signal	E1	E6X	E8X
A	red	1	1
B	orange	2	2
I,R	blue	3	3
+UB	brown	4	4
GND	black	5	5
/A	yellow	6	6
/B	green	7	7
/I, /R	violet	8	8
nc			9

Hint for mounting

For systems with reference points on the magnetic tape please take care that sensor and strip are correctly aligned (see picture).

Reference signal	O, I	R
A, Sensor/tape reading distance	≤0.4 mm	≤0.2 mm
B, Lateral offset	±2 mm	±0.5 mm
C, Alignment error	±3°	±3°
D, Longitudinal inclination	±1°	±1°
E, Lateral inclination	±3°	±3°

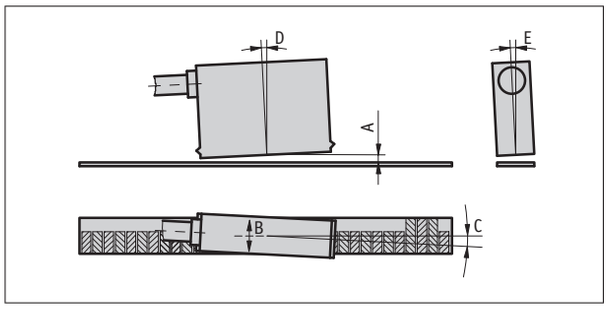

Symbolic representation

Order

Ordering information

one or more system components are required:

Magnetic band MB100/1 page 18

Ordering table

Feature	Ordering data		Specification	Additional information
Operating voltage	10	A	6.5 ... 30 V DC	
	11		4.75 ... 6 V DC	
Design	M	B	metal housing with status LEDs	
	ZM		metal housing without status LEDs	
Type of connection	E1	C	open cable end	
	E6X		bullet connector without mating connector	
	E8X		D-SUB 9-pole without mating connector	
			cable extension on request	
Cable length	...	D	1 ... 20 m, in steps of 1 m	
			others on request	
Reference signal	0	E	without	
	I		periodic index	index signal every 1 mm
	RB		fixed reference	
Resolution	...	F	0.2, 1, 2, 5	
			others on request	
Pulse interval	...	G	0.25, 0.5, 1.00, 2.0	
			others on request	

Order key

MSK1000 - [A] - [B] - [C] - [D] - [E] - [F] - [G]

Scope of delivery: *MSK1000, Mounting instructions, Fastening set*

Additional information:

Quick start, technical details *page 16*
Product overview *page 6*

subject to technical alteration • 2015/10/09 • 10:25 • K

Magnetic sensor LE100/1 linear
Incremental, analog interface 1 V_{SS}

Profile

- Repeat accuracy max. ±1 µm
- Status LED display
- Works with MB100/1 magnetic tape
- Reading distance ≤0.4 mm
- Signal period 1000 µm
- Output circuit sin/cos 1 V_{SS}
- Robust metal housing

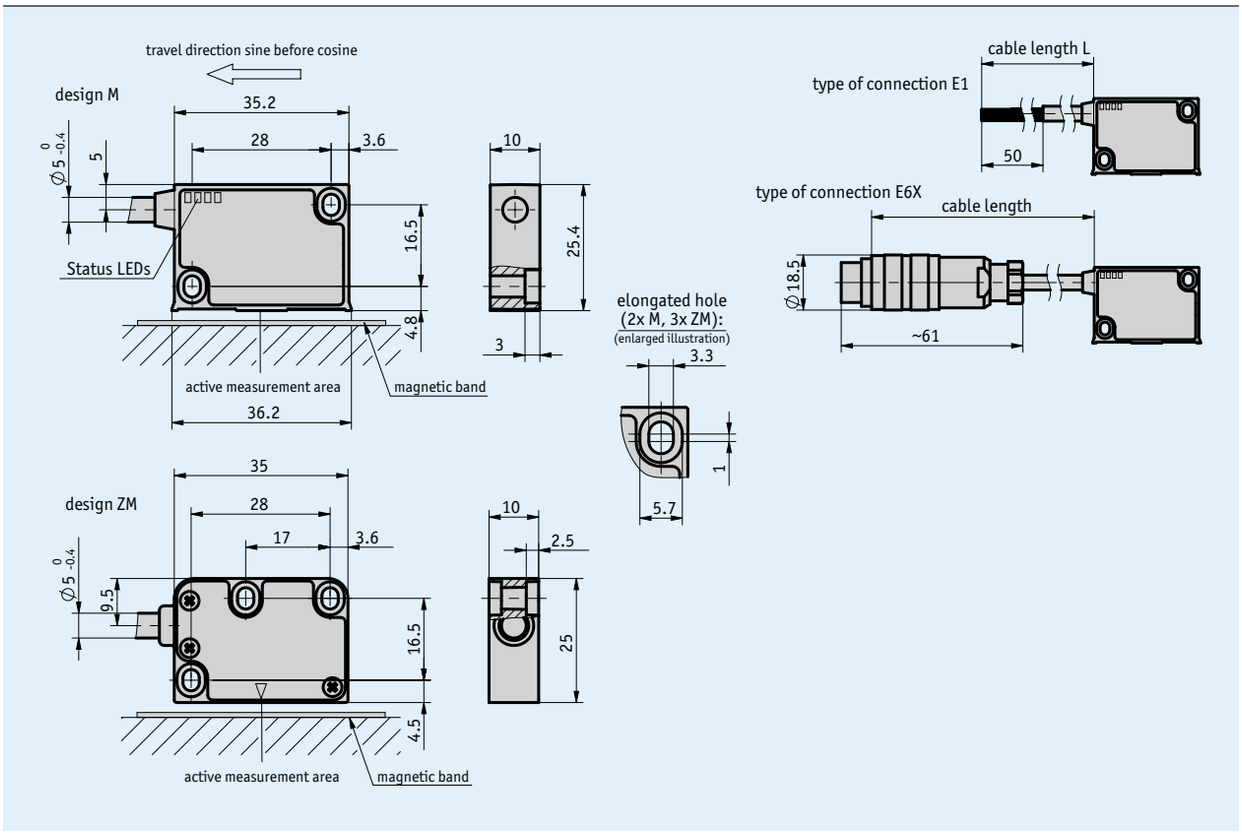

Mechanical data

Feature	Technical data	Additional information
Housing	zinc die-cast/aluminum	M design
	zinc die-cast	ZM design
Sensor/band reading distance	0.1 ... 0.4 mm	reference signal O, IA, ID
	0.1 ... 0.2 mm	reference signal RB, RD
Cable sheath	PUR, suitable for drag-chain use	6, 8-adrig ø$5_{-0.4}$ mm

Electrical data

Feature	Technical data	Additional information
Operating voltage	10.5 ... 30 V DC	reverse polarity protected
	5 V DC ±5 %	no reverse polarity protection
Current consumption	<25 mA	at 24 V DC
	<50 mA	at 5 V DC
Output signals	sin, /sin, cos, /cos, index, /index	
Output voltage	1 V_{PP} ±10 %	at 0 ... 70 °C, 120 Ω teminal resistance
Output impedance	0 Ω (R_{Load} >75 Ω)	short-circuit proof
Signal period	1000 µm	
Offset voltage	2.5 V, ±100 mV	sine/cosine mean to GND (10.5 ... 30 V DC)
	VCC/2 ±100 mV	sine/cosine mean to GND (5 V DC)
Phasing	90°±1°, ±3° (20 kHz)	sin/cos
	45°	sin (reference signal)
	135°	cos (reference signal)
Real-time requirement	speed-proportional signal output	
Type of connection	open cable end	
	plug connector	7/8-pole

Signal pattern

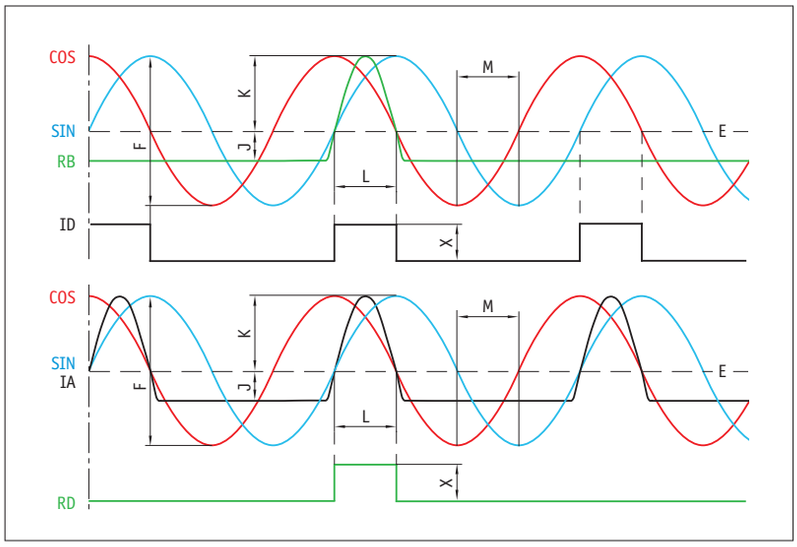

E: Reference voltage 2.5 V
F: 1 V_{SS} ±10 %
J: ≥0.2 V
K: ≥0.3 V
L: 100° ±20 %
M: 90° ±1.0° / ±3° (25 kHz)
X: 1 V_{SS}

5.1

System data

Feature	Technical data	Additional information
System accuracy	10 µm	with MB100/1 accuracy class 10 µm
Repeat accuracy	1 µm	
Measuring range	∞	
Travel speed	≤20 m/s	

Ambient conditions

Feature	Technical data	Additional information
Ambient temperature	-10 ... 70 °C	
Storage temperature	-30 ... 80 °C	
Relative humidity	100 %	condensation admissible
EMC	EN 61000-6-2	interference resistance / immission
	EN 61000-6-4	emitted interference / emission
Protection category	IP67	EN 60529
Shock resistance	500 m/s², 11 ms	EN 60068-2-27
Vibration resistance	200 m/s², 50 Hz ... 2 kHz	EN 60068-2-6

Pin assignment

Without reference signal

Signal	E1	E6X
GND	black	1
sin	red	2
/sin	orange	3
cos	yellow	4
/cos	green	5
+UB	brown	6
nc		7

With reference signal

Signal	E1	E6X
sin	red	1
cos	yellow	2
index	blue	3
+UB	brown	4
GND	black	5
/sin	orange	6
/cos	green	7
/index	violet	8

Hint for mounting

For systems with reference points on the magnetic tape please take care that sensor and strip are correctly aligned (see picture).

Reference signal	O, I	R
A, Sensor/tape reading distance	≤0.4 mm	≤0.2 mm
B, Lateral offset	±2 mm	±0.5 mm
C, Alignment error	±3°	±3°
D, Longitudinal inclination	±1°	±1°
E, Lateral inclination	±3°	±3°

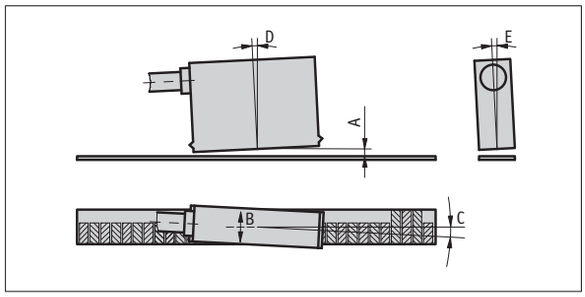

(symbolic sensor representation)

Order

Ordering information

one or more system components are required:

Magnetic band MB100/1 page 18

Ordering table

Feature	Ordering data		Specification	Additional information
Operating voltage	10	A	10.5 ... 30 V DC	
	5		5 V DC ±5 %	
Design	M	B	metal housing with status LEDs	
	ZM		metal housing without status LEDs	
Type of connection	E1	C	open cable end	
	E6X		bullet connector without mating connector	
			cable extension on request	
Cable length	...	D	1 ... 20 m, in steps of 1 m	
			others on request	
Reference signal	0	E	without	
	IA		periodic index (analog)	index signal every 1 mm
	ID		periodic index (digital)	index signal every 1 mm
	RB		fixed, tape side (analog)	
	RD		fixed, tape side (digital)	

Order key

LE100/1 linear - [ ] - [ ] - [ ] - [ ] - [ ]

A B C D E

Scope of delivery: *LE100/1 linear, Mounting instructions, Fastening set*

Additional information:

Quick start, technical details *page 16*
Product overview *page 6*

subject to technical alteration • 2015/10/09 • 10:25 • K

Magnetic sensor LS100
Incremental, miniature design, analog interface 1 V_{SS}

Profile

- Repeat accuracy max. ±1 µm
- Output circuit sin/cos 1 V_{SS}
- Signal period 1000 µm (analog)
- Real-time signal processing
- Works with MB100/1 magnetic tape

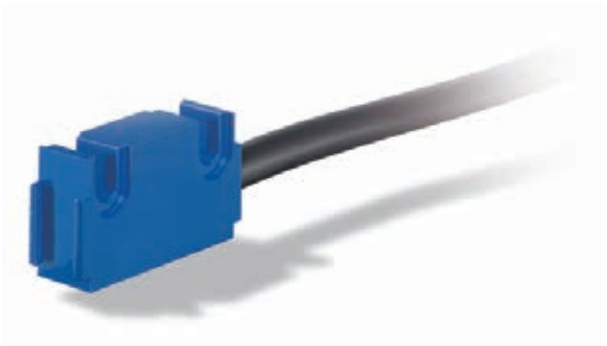

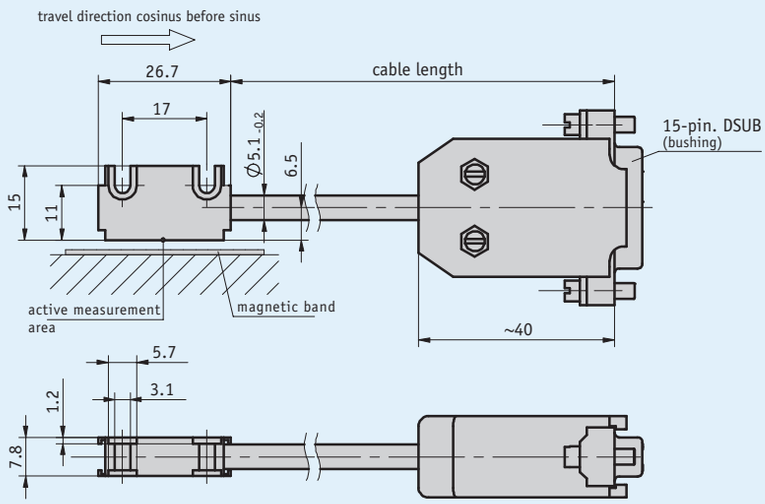

Mechanical data

Feature	Technical data	Additional information
Housing	aluminum blue	
Sensor/band reading distance	0.1 ... 0.4 mm	over the wohle measuring range, without masking tape
Cable sheath	PUR	6-adrig ø5.1$_{-0.2}$ mm

Electrical data

Feature	Technical data	Additional information
Operating voltage	5 V DC ±5 %	no reverse polarity protection
Current consumption	≤30 mA	off-load
Output signals	sin, cos, /sin, /cos	
Output voltage	1 V_{PP} ±10 %	with RA = 120 Ohm until 1 kOhm at 0 ... 20 °C
Output impedance	R_{Load} >75 Ω	
Signal period	1000 µm	
Offset voltage	2.5 V ±0.5 %	
Phasing	90°±1°, ±3° (20 kHz)	
Real-time requirement	speed-proportional signal output	
Type of connection	D-Sub	15-pole, 1x socket

Signal pattern

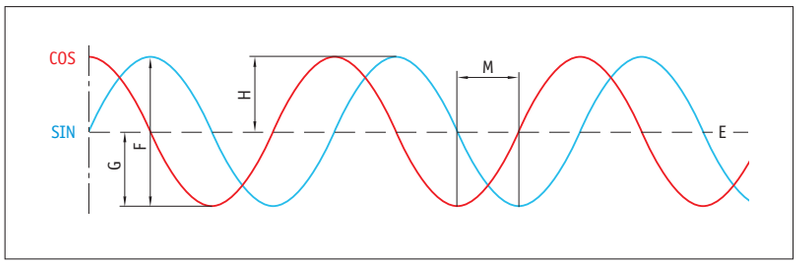

E: Reference voltage 2.5 V
F: 1 V_{SS} ±10 %
Ratio of G to H: Offset ±10 mV
M: 90° ±1.0° / ±3° (25 kHz)

System data

Feature	Technical data	Additional information
System accuracy	±10 µm	with MB100/1 accuracy class 10 µm
Repeat accuracy	±1 µm	unidirectional
Measuring range	∞	
Travel speed	≤20 m/s	

Ambient conditions

Feature	Technical data	Additional information
Ambient temperature	-20 ... 70 °C	sensor head
Storage temperature	-20 ... 85 °C	sensor head
Relative humidity	100 %	condensation admissible
EMC	EN 61000-6-2	interference resistance / immission
	EN 61000-6-4	emitted interference / emission
Protection category	IP67	EN 60529
Shock resistance	2000 m/s², 11 ms	EN 60068-2-27
Vibration resistance	200 m/s², 50 Hz ... 2 kHz	EN 60068-2-6

Pin assignment

Signal	PIN
nc	1
GND (0V)	2
nc	3
nc	4
/B (cos)	5
B (cos+)	6
A (sin+)	7
/A (sin)	8
nc	9
GND (0V)	10
nc	11
+UB	12
nc	13
GND (0V)	14
nc	15

Hint for mounting

A, Sensor/tape reading distance	≤0.4 mm
B, Lateral offset	±2 mm
C, Alignment error	±3°
D, Longitudinal inclination	±1°
E, Lateral inclination	±3°

The length of the cable between the sensor and connector cannot be subsequently increased or decreased.

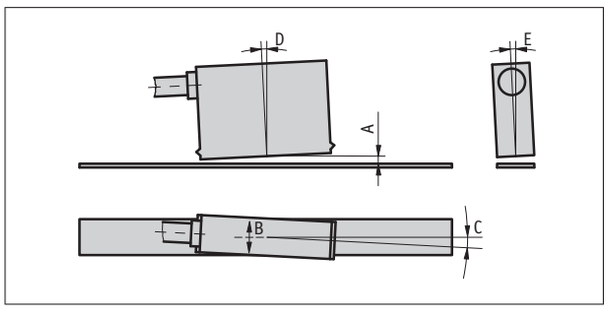

Symbolic representation

Order

Ordering information

one or more system components are required:

Magnetic band MB100/1 page 18

5.1

Ordering table

Feature	Ordering data		Specification	Additional information
Operating voltage	5	A	5 V DC	
			24 V DC, on request	
Cable sheath	PVC	B	PVC	
	PUR		PUR	
Cable length	...	C	01.0 ... 20.0 m, in intervals of 1 m	
			others on request	

Order key

LS100 - [A] - [B] - [C]

Scope of delivery: *LS100, Mounting instructions, Fastening set, distance gage*

Additional information:

Quick start, technical details *page 16*
Product overview *page 6*

subject to technical alteration • 2015/10/09 • 10:25 • K

Profile

- Max. resolution of 1 µm in combination with MA100/2
- Repeat accuracy max. ±1 µm in combination with MA100/2
- Small, compact design
- Works with MB100/1 magnetic tape
- Reading distance ≤0.4 mm

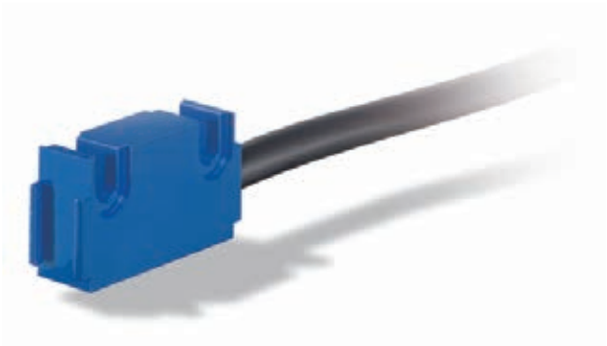

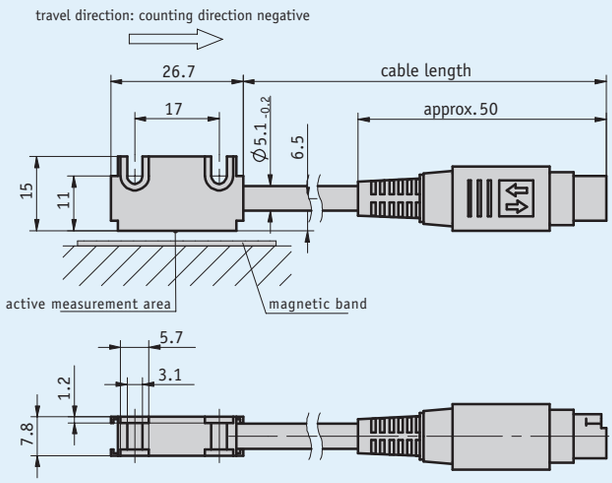

Mechanical data

Feature	Technical data	Additional information
Housing	aluminum blue	
Sensor/band reading distance	≤0.4 mm	
Cable sheath	PUR, PVC	6-adrig ø5.1$_{-0.2}$ mm

Electrical data

Feature	Technical data	Additional information
Operating voltage	supply via display	
Current consumption	supply via display	
Type of connection	mini-DIN	6-pole, 1x pin (for MA100/2 display)

System data

Feature	Technical data	Additional information
System accuracy	depending on downstream electronic unit	
Repeat accuracy	depending on downstream electronic unit	
Travel speed	≤5 m/s	

Magnetic sensor MS100/1
Passive sensor, incremental, for magnetic display MA100/2

Ambient conditions

Feature	Technical data	Additional information
Ambient temperature	-20 ... 70 °C	
Storage temperature	-20 ... 85 °C	
Relative humidity	100 %	condensation admissible (sensor head)
Protection category	IP67	EN 60529 (sensor head)
Shock resistance	2000 m/s^2, 11 ms	EN 60068-2-27
Vibration resistance	200 m/s^2, 50 Hz ... 2 kHz	EN 60068-2-6

Hint for mounting

A, Sensor/tape reading distance	≤0.4 mm
B, Lateral offset	±2 mm
C, Alignment error	±3°
D, Longitudinal inclination	±1°
E, Lateral inclination	±3°

The length of the cable between the sensor and connector cannot be subsequently increased or decreased.

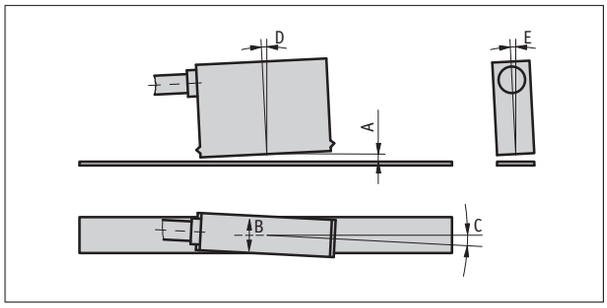

Symbolic representation

Order

Ordering information
one or more system components are required:

Electronic display MA100/2	page 33
Magnetic band MB100/1	page 18

Ordering table

Feature	Ordering data		Specification	Additional information
Cable sheath	PVC	A		
	PUR		oil-resistant	
Cable length	...	B	01.0 ... 10.0 m, in intervals of 1 m	

Order key

MS100/1 - L - [A] - [B]

Scope of delivery: MS100/1, Mounting instructions, Fastening set, distance gage

Additional information:

Quick start, technical details *page 16*
Product overview *page 6*

subject to technical alteration • 2015/10/09 • 10:25 • K

Electronic display MA100/2
Incremental, display accuracy 1 µm

Profile

- Display accuracy max. 1 µm
- Repeat accuracy max. ±1 µm
- High-contrast LCD, 12-digit LCD dot matrix
- Incremental measurement and reset function
- Direct reference/offset value input
- Reference input
- Works with sensor MS100/1
- Option: serial interface RS232/RS485/switching output
- Option: TG01 bench housing

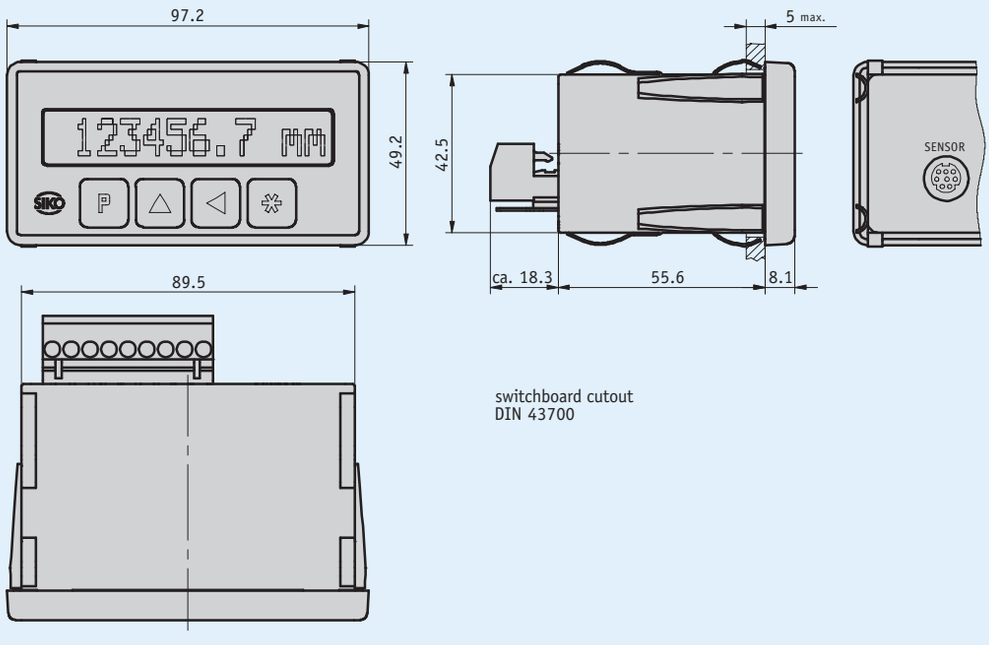

switchboard cutout
DIN 43700

5.1

Mechanical data

Feature	Technical data	Additional information
Housing design	built-in housing, plastic	switchboard cutout $92^{+0.8}$ x $45^{+0.6}$ IEC 61554

Electrical data

Feature	Technical data	Additional information
Operating voltage	24 V DC ±20 %	
	115 V AC ±10 %	
	230 V AC ±10 %	
Current consumption	70 mA	at 24 V DC
	20 mA	at 115 V AC
	10 mA	at 230 V AC
Display/dispaly range	12-digit, LCD dot matrix, backlit	-9999999 ... 9999999
Switching outputs	with or without	2x 30 V ≤100 mA
Interface	without, RS232, RS485	
Type of connection	connector	9-pole (supply, switching output, interface/reference connection)
	mini-DIN	6-pole, 1x socket (MS100/1 sensor)

System data

Feature	Technical data	Additional information
Resolution	0.001, 0.01, 0.1, 1, 10 mm	programmable angle display
	0.001, 0.01, 0.1, 1 inch	
System accuracy	±(0.01 + 0.01 x L) mm; L in m	at T_U = 20 °C
Repeat accuracy	±0.01 mm	±1 increment
Travel speed	≤5 m/s	

5.1

Ambient conditions

Feature	Technical data	Additional information
Ambient temperature	0 ... 50 °C	
Storage temperature	-20 ... 80 °C	
Relative humidity	≤95 %	condensation inadmissible
EMC	EN 61000-6-2	interference resistance / immission
	EN 61000-6-4	emitted interference / emission
Protection category	IP40 whole device	EN 60529
	IP60 at the front with switchboard installation	EN 60529

Pin assignment

Signal	PIN
Reset	1
+24 V DC; ≤50 mA (reference switch)	2
GND	3
nc	4
RS232 (RXD), RS485 (DÜB), actor A2	5
RS232 (TXD), RS485 (DÜA), actor A1	6
PE	7
N (230/115 V AC); GND (24 V DC)	8
L (230/115 V AC); +UB (24 V DC)	9

Order

Ordering information

one or more system components are required:

Magnetic sensor MS100/1 page 31

Ordering table

Feature	Ordering data		Specification	Additional information
Operating voltage	1	A	230 V AC	
	2		115 V AC	
	4		24 V DC	
Interface/protocol	XX/XX	B	without	
	S1/00		RS232 with standard protocol	
	S3/00		RS485 with standard protocol	
Switching output	S0	C	without	
	SM		with	only with XX/XX interface

Order key

MA100/2 - EG - [A] - RM - [B] - [C] - S - BS

Scope of delivery: *MA100/2, Mounting instructions*

Accessories:

Table-top housing TG01 *www.siko-global.com*

Additional information:

Quick start, technical details *page 16*

Product overview *page 6*

subject to technical alteration • 2015/10/09 • 10:25 • K

Magnetic band MBA110
Two-track coded scale, 4000 mm measuring length

Profile

- Absolutely coded scale with 10 mm width
- Easy mounting, field-wireable

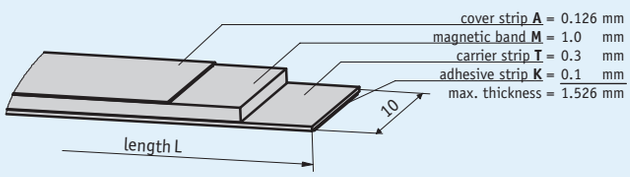

Mechanical data

Feature	Technical data	Additional information
Material	stainless steel	cover strip
Band width	10 mm	
Band thickness	1.4 mm	without cover strip
Mounting type	adhesive connection	double-sided tape premounted

System data

Feature	Technical data	Additional information
Measuring range	≤4000 mm	

Ambient conditions

Feature	Technical data	Additional information
Ambient temperature	-20 ... 70 °C	
Storage temperature	-30 ... 80 °C	
Expansion coefficient	(11 ±1) x 10^{-6}/K	
Relative humidity	100 %	condensation admissible

Order

Ordering information

The necessary tape length is calculated from:
Measured distance + sensor length "S" + (2 x forerun or overrun "B", resp.).

S	see the drawing of the sensor used
B	5 mm (forerun and overrun)

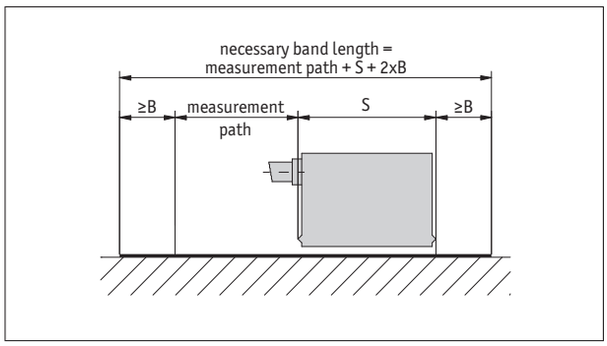

Symbolic representation

Ordering table

Feature	Ordering data		Specification	Additional information
Length	...	A	00.10 ... 04.00 m, in intervals of 0.1 m	ordering detail, see "Ordering information"
Adhesive carrier tape	TM	B	with	
	TO		without	
Cover strip	AM	C	with	
	AO		without	

Order key

MBA110 - [A] - [B] - [C]

Scope of delivery: *MBA110*

Additional information:

Quick start, technical details *page 16*
Product overview *page 6*

subject to technical alteration • 2015/10/09 • 10:25 • K

Magnetic band MBA111
Absolutely coded scale, 4000 mm measuring length

Profile

- Absolutely coded scale with 10 mm width
- Easy mounting, field-wireable

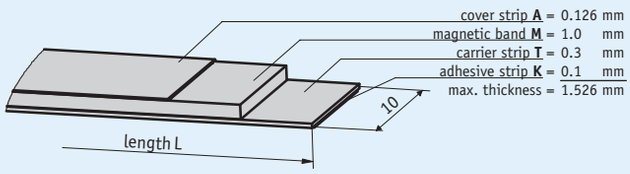

Mechanical data

Feature	Technical data	Additional information
Material	stainless steel	cover strip
Band width	10 mm	
Band thickness	1.4 mm	without cover strip
Mounting type	adhesive connection	double-sided tape premounted

System data

Feature	Technical data	Additional information
Measuring range	≤4000 mm	

Ambient conditions

Feature	Technical data	Additional information
Ambient temperature	-20 ... 70 °C	
Storage temperature	-30 ... 80 °C	
Expansion coefficient	(11 ±1) x 10^{-6}/K	
Relative humidity	100 %	condensation admissible

Order

Ordering information

The necessary tape length is calculated from:
Measured distance + sensor length "S" + (2 x forerun or overrun "B", resp.).

S	see the drawing of the sensor used
B	5 mm (forerun and overrun)

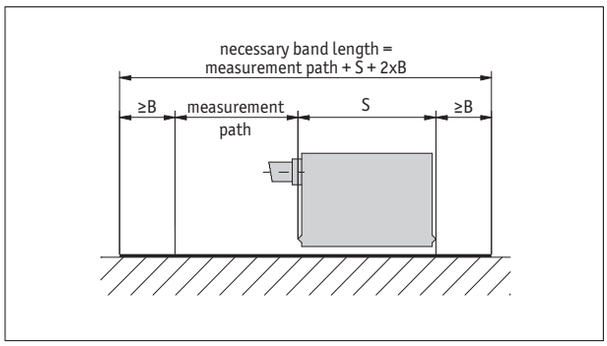

Symbolic representation

Ordering table

Feature	Ordering data		Specification	Additional information
Length	...	A	00.20 ... 04.09 m, in intervals of 0.1 m	ordering detail, see "Ordering information"
Adhesive carrier tape	TM	B	with	
	TO		without	
Cover strip	AM	C	with	
	AO		without	

Order key

MBA111 - [A] - [B] - [C]

Scope of delivery: *MBA111*

Additional information:

Quick start, technical details *page 16*
Product overview *page 6*

subject to technical alteration • 2015/10/09 • 10:25 • K

Magnetic sensor MSA111C
Absolute, high-resolution position capturing

Profile

- Max. resolution 1 µm
- Repeat accuary 10 µm
- System accuracy up to 10 µm
- SSI, RS485, DRIVE-CLiQ output circuits
- Additional analog real-time signal output Sin/Cos 1 V_{SS} for highly dynamic control (SSI/RS485)
- Signal period 1 mm

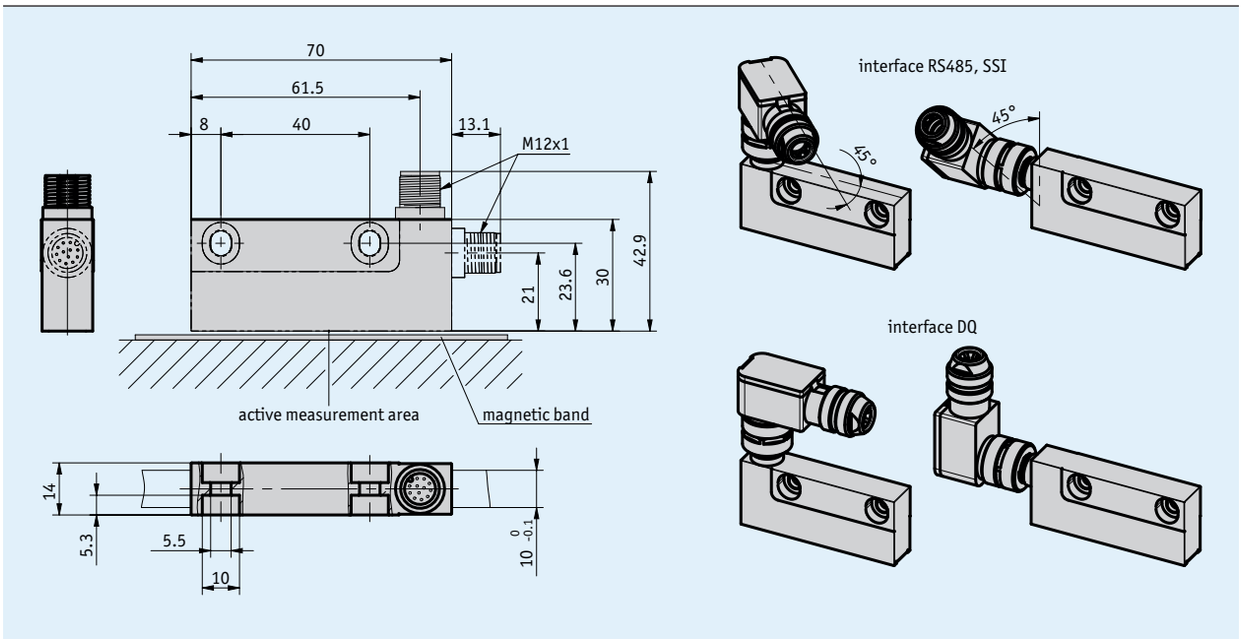

Mechanical data

Feature	Technical data	Additional information
Housing	zinc die-cast	
Sensor/band reading distance	≤0.3 mm	(without masking tape on magnetic tape)

Electrical data

Feature	Technical data	Additional information
Operating voltage	4.5 ... 30 V DC	reverse polarity protected (RS485, SSI)
	10 ... 30 V DC	DRIVE-CLiQ
Power input	≤1.2 W	
Temperature sensor input	external sensor, type KTY84	DRIVE-CLiQ (12-pole plug connector)
SSI clock speed input	≤750 kHz	Caution: max. clock rate depends on cable length
Output voltage	1 V_{PP}	RS485, SSI
Period length of sin/cos output	1000 µm	RS485, SSI
Interface	SSI, RS485, DRIVE-CLiQ	
Real-time requirement	speed-proportional signal output	sin/cos output (RS485, SSI)
Cycle time	<25 µs	RS485, SSI
	<30 µs	DRIVE-CLiQ
Type of connection	M12 plug connector (A-coded)	12-pole, 1x pin (RS485, SSI, DRIVE-CLiQ)
	M12 plug connector (A-coded)	8-pole, 1x pin (DRIVE-CLiQ)

System data

Feature	Technical data	Additional information
Pole length	1 mm	
Resolution	1 µm	
System accuracy	±10 µm	
Repeat accuracy	≤2 µm	unidirectional
Measuring range	≤4000 mm	
Travel speed	≤2 m/s	static operation (RS485, SSI)
	<10 m/s	dynamic operation (sin/cos) (RS485, SSI)
	<5 m/s	DRIVE-CLiQ

Ambient conditions

Feature	Technical data	Additional information
Ambient temperature	-30 ... 85 °C	RS485, SSI
	-30 ... 80 °C	DRIVE-CLiQ
Storage temperature	-40 ... 85 °C	
Expansion coefficient	(11 ±1) x 10^{-6}/K	
Relative humidity	100 %	condensation admissible
EMC	EN 61000-6-2	interference resistance / immission
	EN 61000-6-4	emitted interference / emission
Protection category	IP67	EN 60529, mating connector mounted
Shock resistance	500 m/s², 11 ms	EN 60068-2-27
Vibration resistance	100 m/s², 5 ... 150 Hz	EN 60068-2-6

Pin assignment

RS485, SSI

RS485	SSI	PIN
adjust	adjust	1
D+	D+	2
D-	D-	3
nc	T-	4
+UB	+UB	5
/sin	/sin	6
sin	sin	7
/cos	/cos	8
cos	cos	9
config	config	10
nc	T+	11
0V	0V	12

DRIVE-CLiQ without temperature sensor input

Signal	PIN
+24 V	1
DÜA	2
RXP	3
RXN	4
GND	5
TXN	6
TXP	7
DÜB	8

DRIVE-CLiQ with temperature sensor input

Signal	Pin
+24 V	1
T_{sens}+	2
GND	3
TXN	4
TXP	5
NC	6
RXN	7
RXP	8
DÜA	9
T_{sens}-	10
nc	11
DÜB	12

Hint for mounting

When mounting sensor and magnetic tape, please be careful to align both system components correctly. The arrow marks on the tape and sensor must point in the same direction when mounting the components.

A, Sensor/tape reading distance	≤0.3 mm
B, Lateral offset	+0.4 mm, -0.2 mm
C, Alignment error	<±1°
D, Longitudinal tilt	max. sensor/tape **A** reading distance must never be exceeded.
E, Lateral tilt	max. sensor/tape **A** reading distance must never be exceeded.

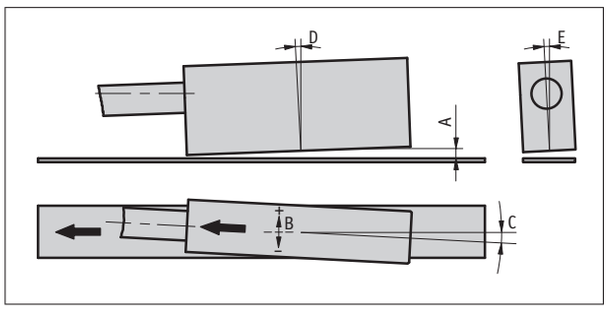

symbolic sensor representation

Order

Ordering information

one or more system components are required:

Magnetic band MBA111 page 38

5.1

Ordering table

Feature	Ordering data		Specification	Additional information
Interface	SSI	A	RS422	
	DQ		DRIVE-CLiQ	
	RS485		SIKONETZ3	
Temperature sensor	K	B	without cable	
	E		for external temperature sensor	only with DQ interface
Connector position	H	C	horizontal	
	V		vertical	

Order key

MSA111C - [ ] - [ ] - [ ] - S

A B C

Scope of delivery: *MSA111C, Mounting instructions, distance gage*

Accessories:

Cable extension KV12S2	*page 192*
Mating Connector Overview	*page 188*
Mating connector, 12-pole, socket	*Order key 85277*
Mating connector, 12-pole, angular socket	*Order key 85278*

Additional information:

Quick start, technical details	*page 16*
Product overview	*page 6*

subject to technical alteration • 2015/10/09 • 10:25 • K

Profile

- Max. resolution 0.2 µm (LD)
- Repeat accuracy ±5 µm
- SSI or RS485 interface
- Scale MBA110
- Reading distance ≤0.4 mm
- Compact, absolutely measuring unit with hard-wired sensor
- Maintenance-free backup battery
- Option: digital LD interface
- Option: analog 1 V_{SS} interface (period length 1 mm)

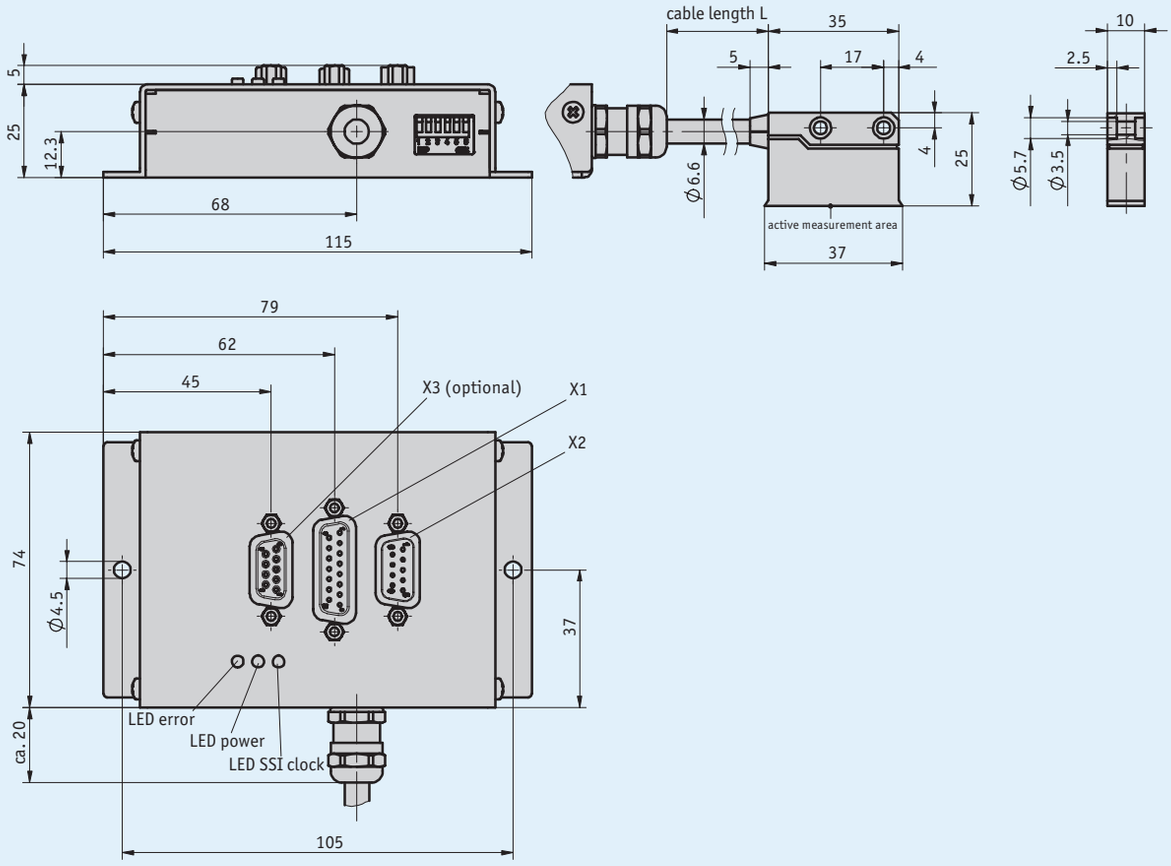

Mechanical data

Feature	Technical data	Additional information
Housing	steel sheet	electrogalvanized
	zinc die-cast	sensor
Cable length	≤6 m	
Cable sheath	PVC suitable for drag-chain use	≥1.000.000 with bending radius = 8x cable diameter and 20 °C

Travel speed

		Travel speed Vmax [m/s]				
Resolution [µm]	**0.5**	0.80	0.32	0.15	0.06	0.02
	1	4.00	1.60	0.72	0.32	0.12
	10	8.00	8.00	7.20	3.20	1.25
	12.5	8.00	8.00	8.00	4.00	1.60
Pulse interval [µs]		0.2	0.5	1.1	2.5	6.3
Counting frequency [kHz]		1250.00	500.00	230.00	100.00	40.00

L'électronique interne d'évaluation est capable de générer des impulsions de comptage dont la longueur est limitée par l'intervalle d'impulsions. L'électronique en aval doit être réglée en conséquence. Le cas échéant, sélectionner d'abord l 'intervalle d'i

5.1

Electrical data

Feature	Technical data	Additional information
Operating voltage	24 V DC ±20 %	reverse polarity protected
Current consumption	<150 mA	
Battery service life	10 year(s)	at T_U = 20 °C, according to manufacturer specification

System data

Feature	Technical data	Additional information
Resolution	1 µm fix	SSI
	≤0.2 µm	LD
	1 mm period length	1Vss
System accuracy	±(0.025 + 0.01 x L) mm, L in m	at T_U = 20 °C (L = length per meter or part thereof)
Repeat accuracy	±5 µm	
Measuring range	4000 mm	others on request
Travel speed	0.5 m/s	SSI absolute value
	8 m/s	

Ambient conditions

Feature	Technical data	Additional information
Ambient temperature	0 ... 60 °C	
Storage temperature	-20 ... 70 °C	
Relative humidity	≤95 %	translation module, condensation inadmissible
	≤100 %	sensor, condensation admissible
EMC	EN 61000-6-2	interference resistance / immission
	EN 61000-6-4	emitted interference / emission
Protection category	IP20	EN 60529 (translation module)
	IP67	EN 60529 (sensor)

Pin assignment

Connector X1

SSI	SSI + 2xLD	PIN
nc	A	1
nc	/A	2
+24 V DC	+24 V DC	3
0 V	0 V	4
nc	nc	5
nc	nc	6
SSI_DATA	SSI_DATA	7
/SSI_DATA	/SSI_DATA	8
nc	B	9
nc	/B	10
nc	nc	11
SSI_GND	SSI_GND	12
nc	nc	13
SSI_CLK	SSI_CLK	14
/SSI_CLK	/SSI_CLK	15

Connector X2

RS485	RS485 + LD	PIN
nc	A	1
nc	B	2
nc	nc	3
+24 V DC	+24 V DC	4
0 V	0 V	5
nc	/A	6
nc	/B	7
DÜA	DÜA	8
DÜB	DÜB	9

Connector X3

$1\ V_{SS}$	PIN
sin	1
/sin	2
cos	3
nc	4
nc	5
nc	6
ANA_GND	7
/cos	8
nc	9

Hint for mounting

When installing the sensor and magnetic tape, always ensure that both system components are correctly aligned. When mounting, the arrow mark on the tape must point to the same direction as the cable outlet.

A, Sensor/tape reading distance	≤0.4 mm
B, Lateral offset	±0.5 mm
C, Alignment error	±1°
D, Longitudinal inclination	±1°
E, Lateral inclination	±2°

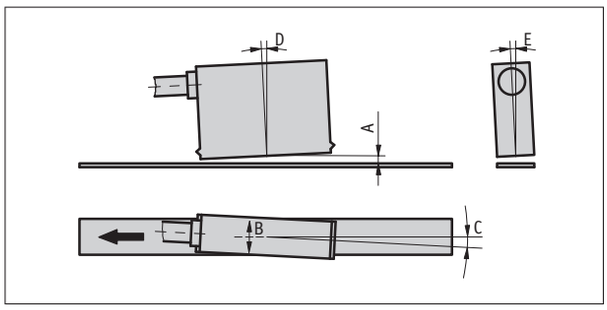

Symbolic representation

Order

Ordering information

one or more system components are required:

Magnetic band MBA110 page 36

Ordering table

Feature	Ordering data		Specification	Additional information
Cable length	...	A	01.0 ... 06.0 m, in intervals of 1 m	
Digital interface	LD	B	Line Driver (RS422)	
	2xLD		2x Line Driver (RS422)	
	0		without	
Digital resolution	...	C	0.2, 1, 10, 12.5	
Pulse interval	...	D	0.2, 0.5, 1.1, 2.5, 6.3 in µs	
Analog interface	1Vss	E	1 V_{SS}	
	0		without	

5.1

Order key

ASA110H - [A] - [B] - [C] - [D] - [E] - S

Scope of delivery: *ASA110H, Mounting instructions, Sensor fastening set*

Accessories:

Mating Connector Overview	*page 188*
Mating connector, X3, 9-pole, pin+shell	*Order key 71364+71365*
Mating connector, X2, 9-pole, socket+shell	*Order key 71366+71365*
Mating connector, X1, 15-pole, socket+shell	*Order key 73947+73946*

Additional information:

Quick start, technical details	*page 16*
Product overview	*page 6*

subject to technical alteration • 2015/10/09 • 10:25 • K

5.2

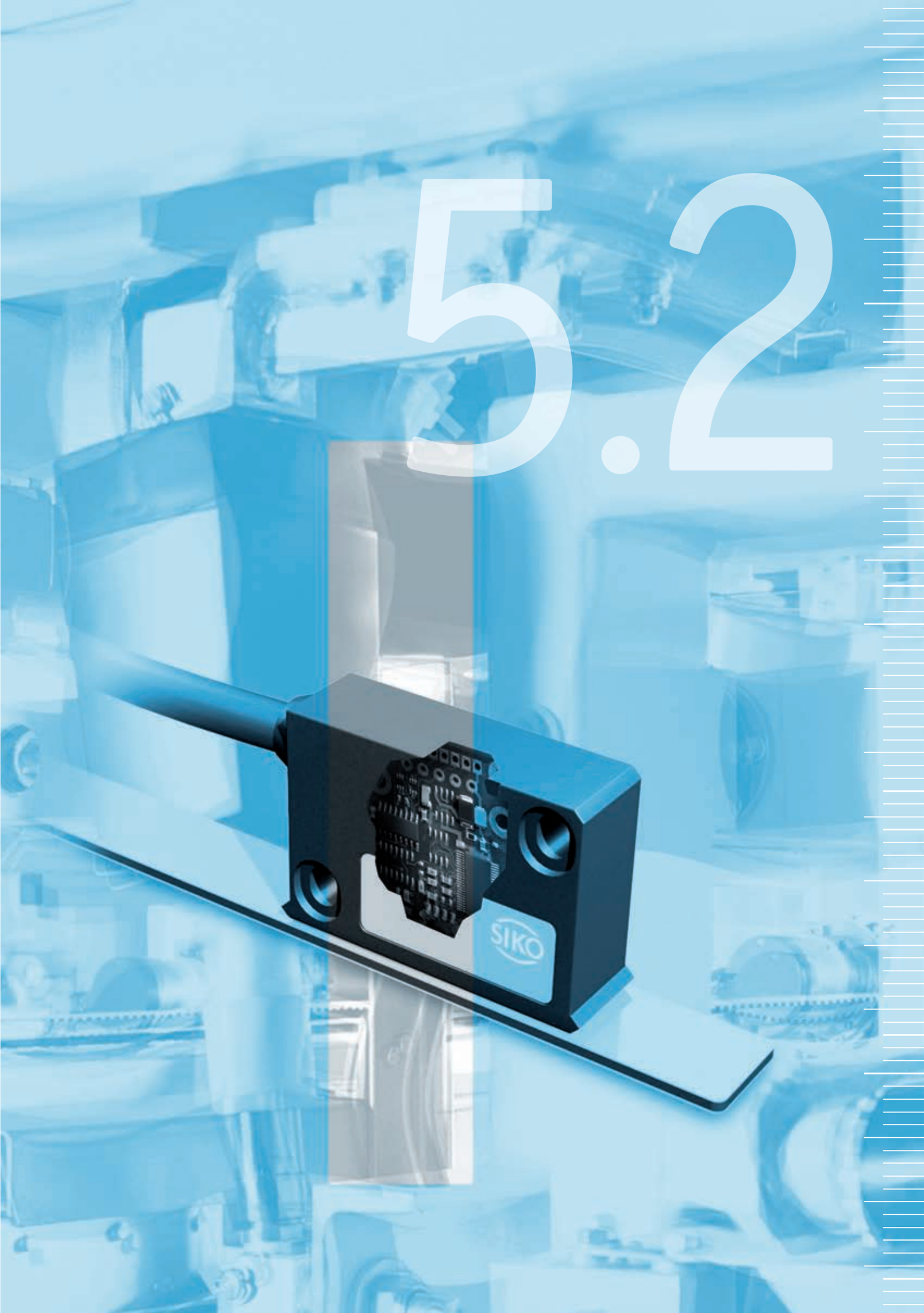

5.0 | Overview 3

5.1 | MagLine Micro 15

5.2 | MagLine Basic

Quick start, technical details		50
Product matrix		51
Products	MB200/1	54
	MB320/1	56
	MB500/1	58
	MSK210 linear	60
	MSK320 linear	64
	MSK5000 linear	68
	MS500	72
	MA502	75
	MA506	78
	AS510/1	80
	MBA	82
	MBA501	84
	MBA511	86
	MSA	88
	MSA501	91
	MSA511	94
	MA505	97
	MA561	100
	MA508/1	102
	MA503/2	105
	MA504/1	107
	MS500H ML	109
	MA503WL	111
	RTX500	114
	MA508SG	117
	ASA510H	120

5.3 | MagLine Macro 125

5.4 | MagLine Roto 145

5.5 | Accessories 183

5.6 | Appendix 195

5.7 | Product index, contact information 203

Introduction

The track-proven and mature Basic range features a varied number of components for incremental and absolute measurement through to the µm range. All measured values can be displayed directly and also processed further by controllers. MagLine Basic is equipped with interfaces for integration into almost all industrial environments.

- Resolutions max. 1 µm
- Repeat accuracy max. 10 µm
- Absolute accuracy up to 20 µm

Product matrix^3 – the key to variety

In accordance with its three functional groups and for a faster overview, the MagLine Basic components and their possible combinations are shown in the following product matrices:

1. **Incremental systems** and
2. **Absolute systems**
   as configurable individual components with a choice between signal evaluation via digital output, a translation module or indicators
3. **Absolute systems with hard-wired sensor**
   For direct indication or evaluation of the measured signal

While free and flexible integration and the related combinability of individual components are the main feature of the incremental and absolute systems (matrices 1 and 2), ready-for-use absolute systems with their integrated sensors (matrix 3) have the “plug and play” advantage. These closed circuit systems are extremely suitable for the direct use of signals at the measuring point (display, evaluation).

Magnetic bands
Available length up to 100 m
Accuracy class up to 20 µm
Reference points as an option

Sensors
Direct connection to translation module and magnetic displays
Max. tolerance of reading distance to scale 2 mm

Translation module
Incremental and absolute position tracking
Real-time signal processing
Resolution 1 µm

Magnetic displays
Incremental and absolute position tracking
Resolution and repeat accuracy up to 10 µm

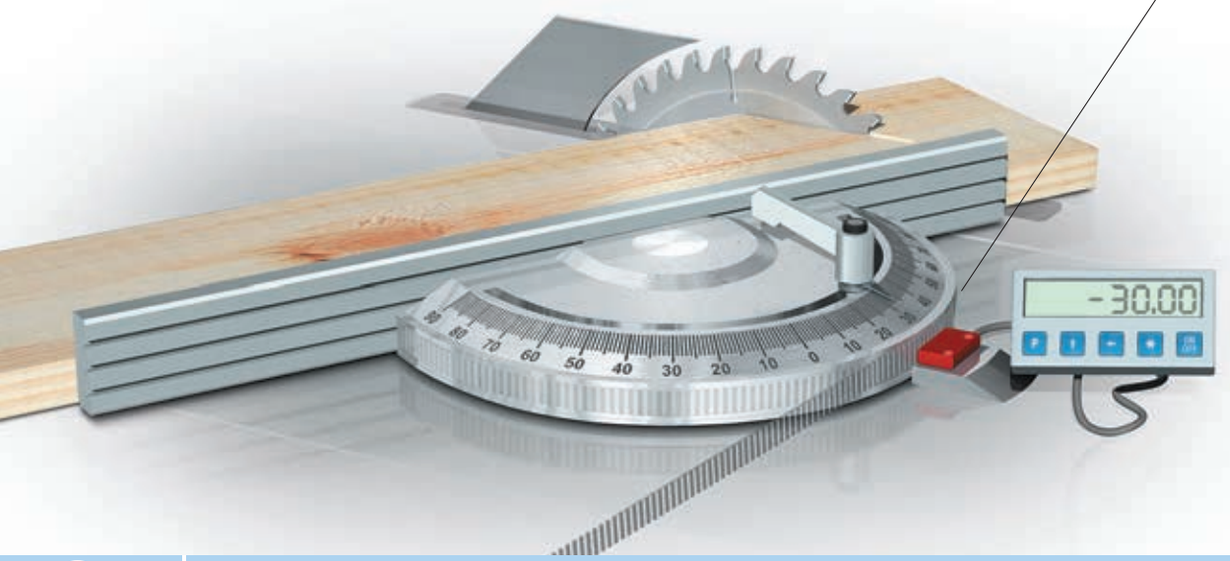

The magnetic band serves as a scale in the measuring system. Its flexible design also permits curved installation on small radii for easy angle measurement.

MagLine Basic

	Incremental systems					
Signal analysis via	**Output, digital**			**Translation module**	**Magnetic display**	
System accuracy class [µm]	±50	±100	±25	±25	±100	±50
Maximum repeat accuracy [µm]	±25	±40	±10	±5	±10	±10
Maximum measurement length/magnetic display [mm]	infinite	infinite	infinite	infinite	±99.999	±9.999.999
Maximum reading distance [mm]	1.0	2.0	2.0	2.0	2.0	2.0

Resolution max. in µm	**Supply voltage**	**Output/ interface**	**Magnetic sensor**	**Page**	
25	24 V DC 5 V DC	PP, LD, TTL	**MSK210**	60	
40	24 V DC 5 V DC	PP, LD, TTL	**MSK320**	64	
1	6.5 ... 30 V DC 4.75 ... 6 V DC	PP, LD	**MSK5000**	68	
*)	feed via downstr. electronics unit	—	**MS500**	72	

			Magnetic display		
10	24 V DC 230 V AC 115 V AC	RS232	**MA502**	75	
10	24 V DC 230 V AC	—	**MA506**	78	

			Translation module		
5	24 V DC 5 V DC	PP, LD	**AS510/1**	80	

Width in mm	**Accuracy class** in µm	**Available length** max. in m/piece	**Magnetic band**		
10	0.05	100	**MB200/1**	54	
5 oder 10	0.1	100	**MB320/1**	56	
5 oder 10	0.1 or 0.05	100	**MB500/1**	58	

*) depending on the downstream electronics or magnetic display

5.2

MagLine Basic

	Absolute systems			
Signal analysis via	**Magnetic display**		**Translation module**	
System accuracy class [µm]	±50	±50	±50	±100
Maximum repeat accuracy [µm]	±10	±10	±10	±10
Maximum measurement length/magnetic display [mm]	5120	5120	10240	20480
Maximum reading distance [mm]	1.0	1.0	1.3	2.0

Resolution max. in µm	**Supply voltage**	**Output/ interface**	**Magnetic sensor**	**Page**				
*)	**)	—	**MSA**	88				
10	10 ... 30 V DC	SSI or RS485	**MSA501**	91				
10	24 V DC	SSI	**MSA511**	94				

			Magnetic display					
10	24 V DC 230 V AC 115 V AC	RS232	**MA505**	97				
10	10 ... 30 V DC	—	**MA561**	100				

Width in mm	**Accuracy class** in µm	**Available length** max. in m/piece	**Magnetic band**					
20	±50	100	**MBA**	82				
20	±50	100	**MBA501**	84				
20	±100	100	**MBA511**	86				

*) depending on the downstream electronics or magnetic display, **)feed via downstream electronics unit

5.2

MagLine Basic

Signal analysis via	Absolute systems with wired sensor Magnetic display					Translation module
System accuracy class [µm]	±100	±100	±100	±100	–	±25
Maximum repeat accuracy [µm]	±10	±10	±10	±10	±150	±5
Maximum measurement length/magnetic display [mm]	±999 999	±999 999	±999 999	±99 999	±99 999	±655 000
Maximum reading distance [mm]	2.0	2.0	2.0	2.0	–	2.0
Maximum measuring range [mm]	–	–	–	–	2000	

Resolution max. in µm	Supply voltage	Output/ interface	Magnetic display	Page						
10	3 V DC 1.5 V DC	—	**MA503/2**	105						
10	3 V DC	—	**MA503WL** sender	111						
	24 V DC	RS232, RS485	**RTX500** receiver	114						
10	3 V DC	—	**MA504/1**	107						
100	intern 3 V DC	—	**MA508/1**	102						
100	intern 3 V DC	—	**MA508SG**	117						

Resolution max. in µm	Supply voltage	Output/ interface	Magnetic sensor	Page						
*)	feed via downstr. electronics unit	—	**MS500H**	109						

			Translation module							
5	24 V DC	1 V_{SS}, LD, SSI, RS485	**ASA510H**	120						

Width in mm	Accuracy **class** in µm	Available length max. in m/piece	Magnetic band							
5 oder 10	0.1 or 0.05	100	**MB500/1**	58						

*) abhängig von der nachgeschalteten Elektronik bzw. Messanzeige

5.2

Magnetic band MB200/1
Incrementally coded scale, pole length 2 mm

Profile

- Easy adhesive mounting, self-assembly possible
- Reels up to 100 m available
- System accuracy up to 20 µm

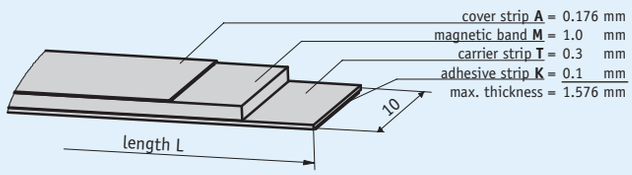

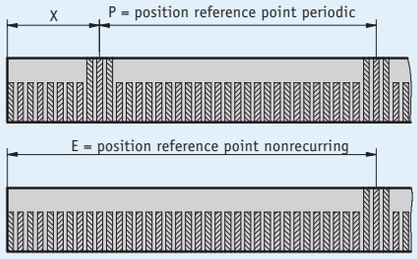

5.2

Mechanical data

Feature	Technical data	Additional information
Material	stainless steel	cover strip
Band width	10 mm	
Band thickness	1.4 mm	without cover strip
Mounting type	adhesive connection	premounted double-sided adhesive tape
Accuracy class	50 µm	

- **Measurement table of reference points**

Reference points [m]	
Fixed distance **X**	0.05
Periodic **P**	0.06, 0.2
Onetime **E**	0.05, 0.1, 0.16, 0.2, 0.5, 0.8

System data

Feature	Technical data	Additional information
Pole length	2 mm	
Measuring range	∞	

Ambient conditions

Feature	Technical data	Additional information
Ambient temperature	-20 ... 70 °C	
Storage temperature	-40 ... 70 °C	
Expansion coefficient	(11 ±1) x 10^{-6}/K	spring steel
Relative humidity	100 %	condensation admissible

Order

Ordering information

The necessary tape length is calculated from:
Measured distance + sensor length "S" + (2 x forerun or overrun "B", resp.).

S	see the drawing of the sensor used
B	10 mm (forerun and overrun)

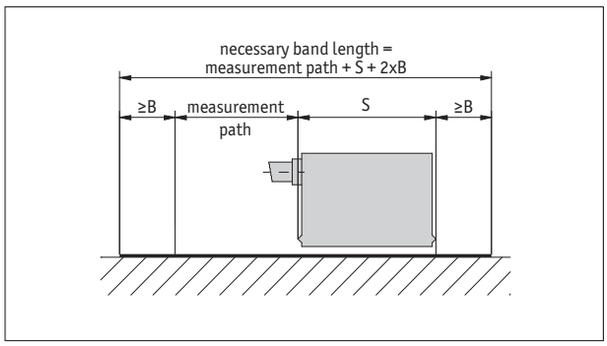

Symbolic representation

Ordering table

Feature	Ordering data		Specification	Additional information
Length	...	A	000.10 ... 100.00 m, in intervals of 0.1 m	ordering detail, see "Ordering information"
Material carrier tape	St	B	steel	
	VA		stainless steel	
Adhesive carrier tape	TM	C	with	
	TO		without	
Cover strip	AM	D	with	
	AO		without	
Reference point	0	E	without	
	E		unique	
	P		periodic	
Reference point position	...	F	0.05, 0.1, 0.16, 0.2, 0.5, 0.8 in m	indicate only if reference point E is chosen, ≤5.0 m
	...		0.06, 0.2 in m	indicate only if reference point P is chosen
			others on request	

Order key

MB200/1 - [A] - [B] - [C] - [D] - [E] - [F]

Scope of delivery: *MB200/1*

Accessories:

Profile Rail PS *page 185*
Protective band SB *page 186*
Profile Rail PS1 *page 184*

Additional information:

Quick start, technical details *page 50*
Product overview *page 6*

subject to technical alteration • 2015/10/09 • 10:25 • K

Magnetic band MB320/1
Incrementally coded scale, pole length 3.2 mm

Profile

- Easy adhesive mounting, self-assembly possible
- Reels up to 100 m available
- System accuracy up to 100 µm

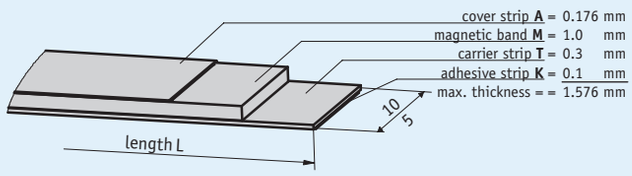

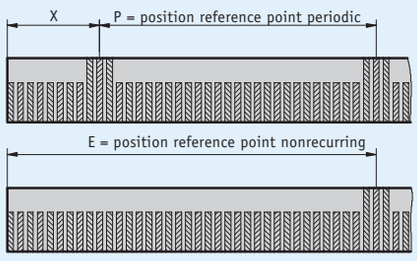

5.2

Mechanical data

Feature	Technical data	Additional information
Material	stainless steel	cover strip
Band width	10 mm or 5 mm	
Band thickness	1.4 mm	without cover strip
Mounting type	adhesive connection	premounted double-sided adhesive tape
Accuracy class	100 µm	

- **Measurement table of reference points**

Reference points [m]	
Fixed distance **X**	0.032
Periodic **P**	0.032, 0.32
Onetime **E**	0.032, 0.064, 0.096, 0.128, 0.3, 0.32

System data

Feature	Technical data	Additional information
Pole length	3.2 mm	
Measuring range	∞	

Ambient conditions

Feature	Technical data	Additional information
Ambient temperature	-20 ... 70 °C	
Storage temperature	-40 ... 70 °C	
Expansion coefficient	(11 ±1) x 10^{-6}/K	spring steel
	(16 ±1) x 10^{-6}/K	stainless steel
Relative humidity	100 %	condensation admissible

Order

Ordering information

The necessary tape length is calculated from:
Measured distance + sensor length "S" + (2 x forerun or overrun "B", resp.).

S	see the drawing of the sensor used
B	10 mm (forerun and overrun)

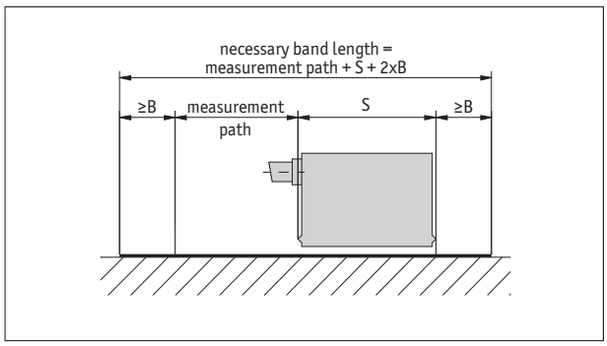

Symbolic representation

Ordering table

Feature	Ordering data		Specification	Additional information
Length	...	A	000.10 ... 100.00 m, in intervals of 0.1 m	ordering detail, see "Ordering information"
tapewidth	10	B	in mm	
	5		in mm	
Material carrier tape	St	C	steel	
	VA		stainless steel	
Adhesive carrier tape	TM	D	with	
	TO		without	
Cover strip	AM	E	with	stainless steel
	AO		without	
Reference point	0	F	without	
	E		unique	only with 10 mm width
	P		periodic	only with 10 mm width
Reference point position	...	G	0.032, 0.064, 0.096, 0.128, 0.3, 0.32 in m	indicate only if reference point E is chosen, ≤5.0 m
	...		0.032, 0.32 in m	indicate only if reference point P is chosen
			others on request	

Order key

MB320/1 - [A] - [B] - [C] - [D] - [E] - [F] - [G]

Scope of delivery: *MB320/1*

Accessories:

Profile Rail PS *page 185*
Protective band SB *page 186*
Profile Rail PS1 *page 184*

Additional information:

Quick start, technical details *page 50*
Product overview *page 6*

subject to technical alteration • 2015/10/09 • 10:25 • K

Magnetic band MB500/1
Incrementally coded scale, pole length 5 mm

Profile

- Easy adhesive mounting, self-assembly possible
- Reels up to 100 m available
- System accuracy up to 50 µm

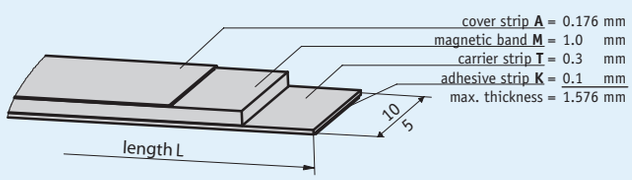

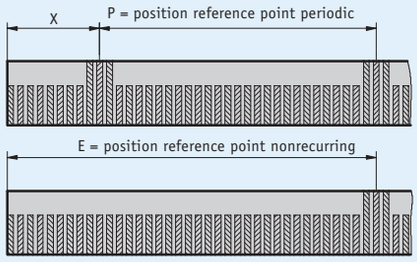

5.2

Mechanical data

Feature	Technical data	Additional information
Material	stainless steel	cover strip
Band width	10 mm or 5 mm	
Band thickness	1.4 mm	without cover strip
Mounting type	adhesive connection	premounted double-sided adhesive tape
Accuracy class	50 µm or 100 µm	

- **Measurement table of reference points**

Reference points [m]	
Fixed distance **X**	0.05
Periodic **P**	0.2, 0.3, 0.5
Onetime **E**	0.05, 0.1, 0.2, 0.5, 1, 2

System data

Feature	Technical data	Additional information
Pole length	5 mm	
Measuring range	∞	

Ambient conditions

Feature	Technical data	Additional information
Ambient temperature	-20 ... 70 °C	
Storage temperature	-40 ... 70 °C	
Expansion coefficient	(11 ±1) x 10^{-6}/K	spring steel
	(16 ±1) x 10^{-6}/K	stainless steel
Relative humidity	100 %	condensation admissible

Order

Ordering information

The necessary tape length is calculated from:
Measured distance + sensor length "S" + (2 x forerun or overrun "B", resp.).

S	see the drawing of the sensor used
B	10 mm (forerun and overrun)

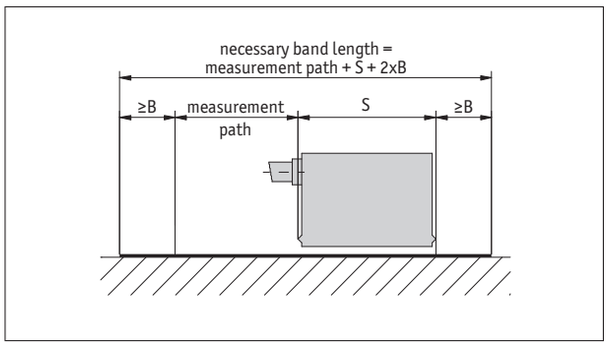

Symbolic representation

Ordering table

Feature	Ordering data		Specification	Additional information
Length	...	A	000.10 ... 100.00 m, in intervals of 0.1 m	ordering detail, see "Ordering information"
tapewidth	10/10	B	in mm	
	5		in mm	
Accuracy	0.1	C	0.1 mm	
	0.05		0.05 mm	
Material carrier tape	St	D	steel	
	VA		stainless steel	
Adhesive carrier tape	TM	E	with	
	T0		without	
Cover strip	AM	F	with	stainless steel
	A0		without	
Masking tape width	10.0	G	in mm	
	5.0		in mm	
Reference point	0	H	without	
	E		unique	only with 10 mm width
	P		periodic	only with 10 mm width
Reference point position	...	I	0.05, 0.1, 0.2, 0.5, 1.0, 2.0 in m	indicate only if reference point E is chosen, ≤5.0 m
	...		0.2, 0.3, 0.5 in m	indicate only if reference point P is chosen
			others on request	

Order key

MB500/1 - [A] - [B] - [C] - [D] - [E] - [F] - [G] - [H] - [I]

Scope of delivery: *MB500/1*

Accessories:

Profile Rail PS *page 185*
Protective band SB *page 186*
Profile Rail PS1 *page 184*

Additional information:

Quick start, technical details *page 50*
Product overview *page 6*

subject to technical alteration • 2015/10/09 • 10:25 • K

Magnetic sensor MSK210 linear
Compact sensor, incremental, digital interface, resolution 25 µm

Profile

- Max. resolution 25 µm
- Repeat accuracy ±0.025 mm
- works with magnetic tape MB200/1
- Reading distance ≤1 mm

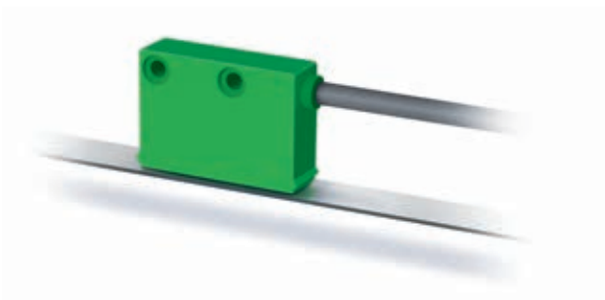

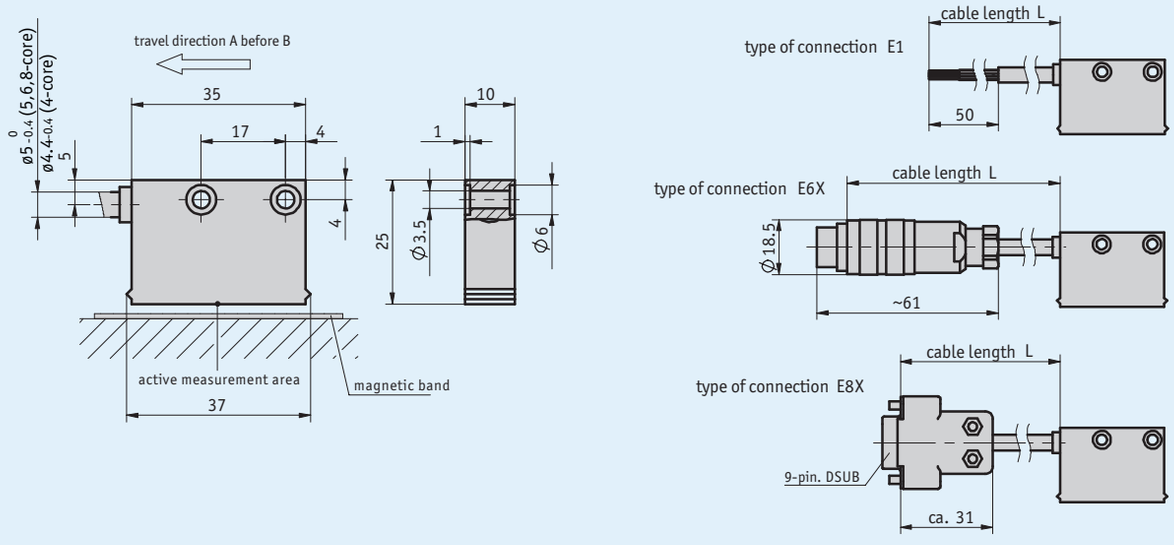

Mechanical data

Feature	Technical data	Additional information
Housing	green plastic	
Sensor/band reading distance	0.1 ... 1 mm	0, I reference signals
	0.1 ... 0.4 mm	R reference signal
Cable sheath	PUR suitable for drag-chain use	4-wire ø4.4$_{-0.4}$ mm; 5, 6, 8-wire ø5$_{-0.4}$ mm

Electrical data

Feature	Technical data	Additional information
Operating voltage	24 V DC±20 %	reverse polarity protected
	5 V DC ±5 %	no reverse polarity protection
Current consumption	<20 mA	at 24 V DC, off-load
	<75 mA	loaded
Output circuit	PP, LD (RS422), TTL	PP only with 24 V
Output signals	A, A/, B, B/, I, I/, R, R/	quadrature signal
Output signal level high	>UB - 2.5 V	PP
	>2.5 V	LD
	>2.4 V	TTL
Output signal level low	<0.8 V	PP
	<0.5 V	LD
	<0.4 V	TTL
Jitter	<15 %	0.5 mm reading distance
Pulse width of reference signal	1 increment(s)	
Real-time requirement	speed-proportional signal output	
Type of connection	open cable end	
	plug connector	7/8-pole
	D-Sub	9-pole

Signal pattern

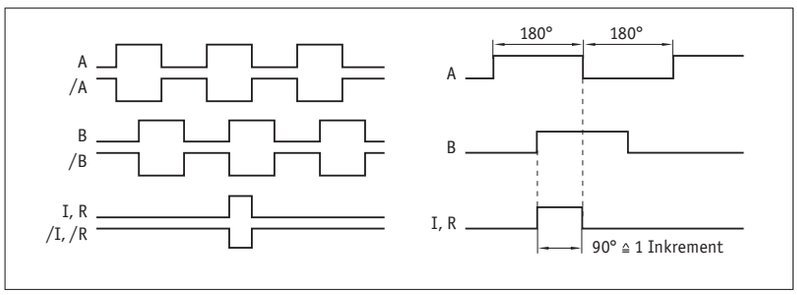

The logical condition of signals A and B is not defined in reference to the index signal I or the reference signal R. It can deviate from the signal form.

System data

Feature	Technical data	Additional information
Resolution	0.025, 0.05, 0.1, 0.5 mm	
System accuracy	±(0.05 + 0.01 x L) mm, L in m	
Repeat accuracy	±1 increment(s)	
Measuring range	∞	
Travel speed	≤25 m/s	≤2 m/s referencing speed

Ambient conditions

Feature	Technical data	Additional information
Ambient temperature	-10 ... 70 °C	
Storage temperature	-30 ... 80 °C	
Relative humidity	100 %	condensation admissible
EMC	EN 61000-6-2	interference resistance / immission
	EN 61000-6-4	emitted interference / emission
Protection category	IP67	EN 60529
Shock resistance	500 m/s^2, 11 ms	EN 60068-2-27
Vibration resistance	100 m/s^2, 5 ... 150 Hz	EN 60068-2-6

Pin assignment

Not inverted without reference signal

Signal	E1	E6X	E8X
GND	black	1	1
+UB	brownn	2	2
A	red	3	3
B	orange	4	4
nc		5	5
nc		6	6
nc		7	7
nc			8
nc			9

Inverted with reference signal

Signal	E1	E6X	E8X
A	red	1	1
B	orange	2	2
I	blue	3	3
+UB	brown	4	4
GND	black	5	5
A/	yellow	6	6
B/	gren	7	7
I/	violet	8	8
nc			9

Inverted without reference signal

Signal	E1	E6X	E8X
A	red	1	1
B	orange	2	2
nc		3	3
+UB	brown	4	4
GND	black	5	5
A/	yellow	6	6
B/	green	7	7
nc			8
nc			9

5.2

Hint for mounting

For systems with reference points on the magnetic tape please take care that sensor and strip are correctly aligned (see picture).

Reference signal	O, I	R
A, Sensor/tape reading distance	≤1 mm	≤0.4 mm
B, Lateral offset	±2 mm	±0.5 mm
C, Alignment error	±1°	±1°
D, Longitudinal inclination	±1°	±1°
E, Lateral inclination	±3°	±3°

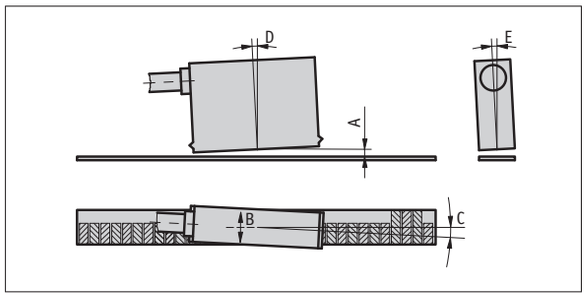

(symbolic sensor representation)

Order

Ordering information

one or more system components are required:

Magnetic band MB200/1 page 54

Ordering table

Feature	Ordering data		Specification	Additional information
Operating voltage	4	A	24 V DC ±20%	
	5		5 V DC ±5%	
Type of connection	E1	B	open cable end	
	E6X		bullet connector without mating connector	
	E8X		D-SUB 9-pole without mating connector	
			cable extensions on request	
Cable length	...	C	1 ... 20 m, in steps of 1 m	
			others on request	
Output circuit	PP	D	push-pull	only with operating voltage 4
	LD		LineDriver	
	TTL		TTL	only with non-inverted output signal, cable length ≤5 m
Output signal	NI	E	not inverted	
	I		inverted	
Reference signal	0	F	without	
	I		periodic index	index signal every 2 mm
	R		fixed reference	
Resolution	...	G	0.025, 0.05, 0.1, 0.5	
			others on request	

Order key

MSK210 linear - [ ] - A - [ ] - [ ] - [ ] - [ ] - [ ] - [ ] - [ ] - [ ]
A B C D E F G

Scope of delivery: *Fastening set, Mounting instructions, MSK210 linear*

Additional information:

Quick start, technical details *page 50*
Product overview *page 6*

subject to technical alteration • 2015/10/09 • 10:25 • K

Magnetic sensor MSK320 linear
Compact sensor, incremental, digital interface, resolution 40 µm

Profile

- Max. resolution 40 µm
- Repeat accuracy ±0.04 mm
- works with magnetic tape MB320/1
- Reading distance ≤2 mm

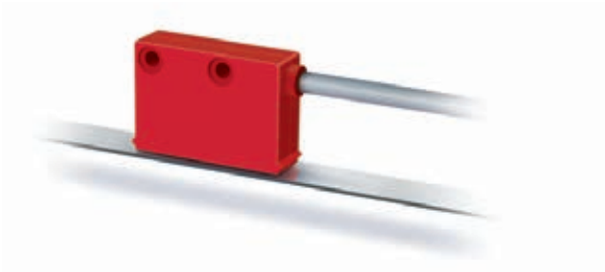

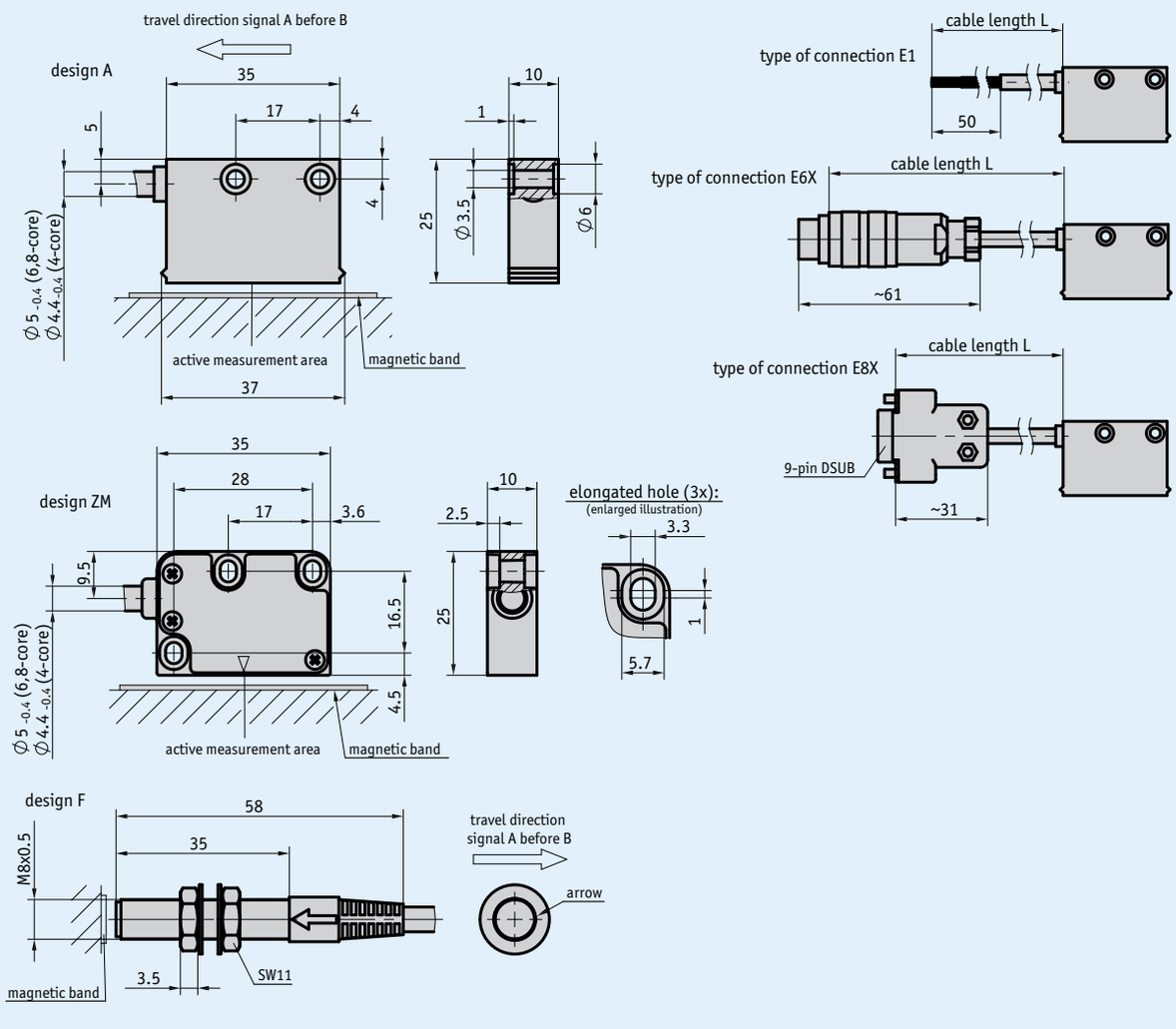

Mechanical data

Feature	Technical data	Additional information
Housing	red plastic	A design
	steel	F design
	zinc die-cast	ZM design
Sensor/band reading distance	0.1 ... 2 mm	0, I reference signals
	0.1 ... 1.5 mm	R reference signal
Cable sheath	PUR suitable for drag-chain use	4-wire ø4.4$_{-0.4}$ mm; 5, 6, 8-wire ø5$_{-0.4}$ mm

Electrical data

Feature	Technical data	Additional information
Operating voltage	24 V DC ±20 %	reverse polarity protected
	5 V DC ±5 %	no reverse polarity protection
Current consumption	<20 mA	at 24 V DC, unloaded
	<75 mA	loaded
Output circuit	PP, LD (RS422), TTL	PP only at 24 V
Output signals	A, A/, B, B/, I, I/, R, R/	quadrature signal
Output signal level high	>UB - 2.5 V	PP
	>2.5 V	LD
	>2.4 V	TTL
Output signal level low	<0.8 V	PP
	<0.5 V	LD
	<0.4 V	TTL
Jitter	<15 %	0.5 mm reading distance
Pulse width of reference signal	1 increment(s)	
Real-time requirement	speed-proportional signal output	
Type of connection	open cable end	
	plug connector	7/8-pole
	D-Sub	9-pole

Signal pattern

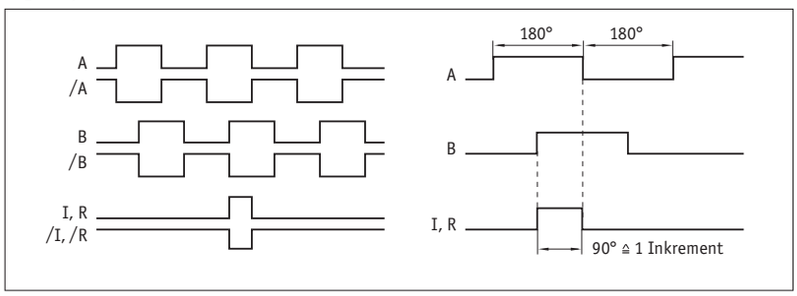

The logical condition of signals A and B is not defined in reference to the index signal I or the reference signal R. It can deviate from the signal form.

System data

Feature	Technical data	Additional information
Resolution	0.04, 0.05, 0.08, 0.1, 0.16, 0.2, 0.8 mm	
System accuracy	±(0.1 + 0.01 x L) mm, L in m	
Repeat accuracy	±1 increment(s)	at T_U = 20 °C
Measuring range	∞	
Travel speed	≤25 m/s	≤3.2 m/s referencing speed

Ambient conditions

Feature	Technical data	Additional information
Ambient temperature	-10 ... 70 °C	
Storage temperature	-30 ... 80 °C	
Relative humidity	100 %	condensation admissible
EMC	EN 61000-6-2	interference resistance / immission
	EN 61000-6-4	emitted interference / emission
Protection category	IP67	EN 60529
Shock resistance	500 m/s^2, 11 ms	EN 60068-2-27
Vibration resistance	100 m/s^2, 5 ... 150 Hz	EN 60068-2-6

Pin assignment

Not inverted without reference signal

Signal	E1	E6X	E8X
GND	black	1	1
+UB	brown	2	2
A	red	3	3
B	orange	4	4
nc		5	5
nc		6	6
nc		7	7
nc			8
nc			9

Inverted with reference signal

Signal	E1	E6X	E8X
A	red	1	1
B	orange	2	2
I	blue	3	3
+UB	brown	4	4
GND	black	5	5
A/	yellow	6	6
B/	green	7	7
I/	violet	8	8
nc			9

Inverted without reference signal

Signal	E1	E6X	E8X
A	red	1	1
B	orange	2	2
nc		3	3
+UB	brown	4	4
GND	black	5	5
A/	yellow	6	6
B/	green	7	7
nc			8
nc			9

5.2

Hint for mounting

For systems with reference points on the magnetic tape please take care that sensor and strip are correctly aligned (see picture).

Reference signal	O, I	R
A, Sensor/tape reading distance	≤2 mm	≤1.5 mm
B, Lateral offset	±2 mm	±0.5 mm
C, Alignment error	±3°	±3°
D, Longitudinal inclination	±1°	±1°
E, Lateral inclination	±3°	±3°

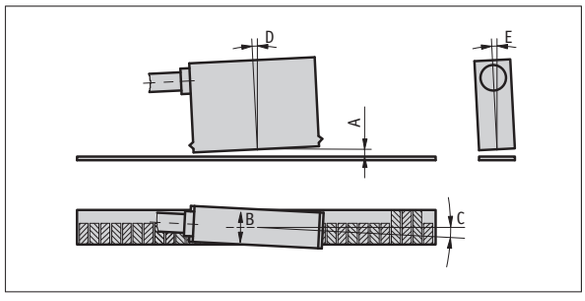

(symbolic sensor representation)

Order

Ordering information

one or more system components are required:

Magnetic band MB320/1 page 56

Ordering table

Feature	Ordering data		Specification	Additional information
Operating voltage	4	A	24 V DC ±20 %	reverse polarity protected
	5		5 V DC ±5 %	
Design	A	B	rectangular	
	ZM		metal housing without status LEDs	
	F		round	only with NI output signal, O reference signal and 0.1 mm resolution
Type of connection	E1	C	open cable end	
	E6X		bullet connector without mating connector	
	E8X		D-SUB 9-pole without mating connector	
			extension cables on request	
Cable length L	...	D	1.0 ... 20 m, in steps of 1 m	
			others on request	
Output circuit	PP	E	push-pull	only operating voltage 4
	LD		Line-Driver	
	TTL			only with non-inverted output signal, ≤ 5 m cable length
Output signal	NI	F	not inverted	
	I		inverted	only with A or ZM design and I or R reference signal
Reference signal	O	G	without	
	I		periodic index	only with A or ZM design, index signal every 3.2 mm
	R		fixed reference	only with A or ZM design, not with scaling factor 1
Resolution	0.04	H		
	...		0.05, 0.08, 0.1, 0.16, 0.2, 0.8, 0.4	
			others on request	

Order key

MSK320 linear - [A] - [B] - [C] - [D] - [E] - [F] - [G] - [H]

Scope of delivery: *Fastening set, Mounting instructions, MSK320 linear*

Additional information:

Quick start, technical details *page 50*
Product overview *page 6*

subject to technical alteration • 2015/10/09 • 10:25 • K

Magnetic sensor MSK5000 linear
Incremental, digital interface, resolution 1 µm

Profile

- Max. resolution 1 µm
- Repeat accuracy ±0.01 mm
- Status LED display
- Works with magnetic tape MB500/1
- Reading distance ≤2 mm

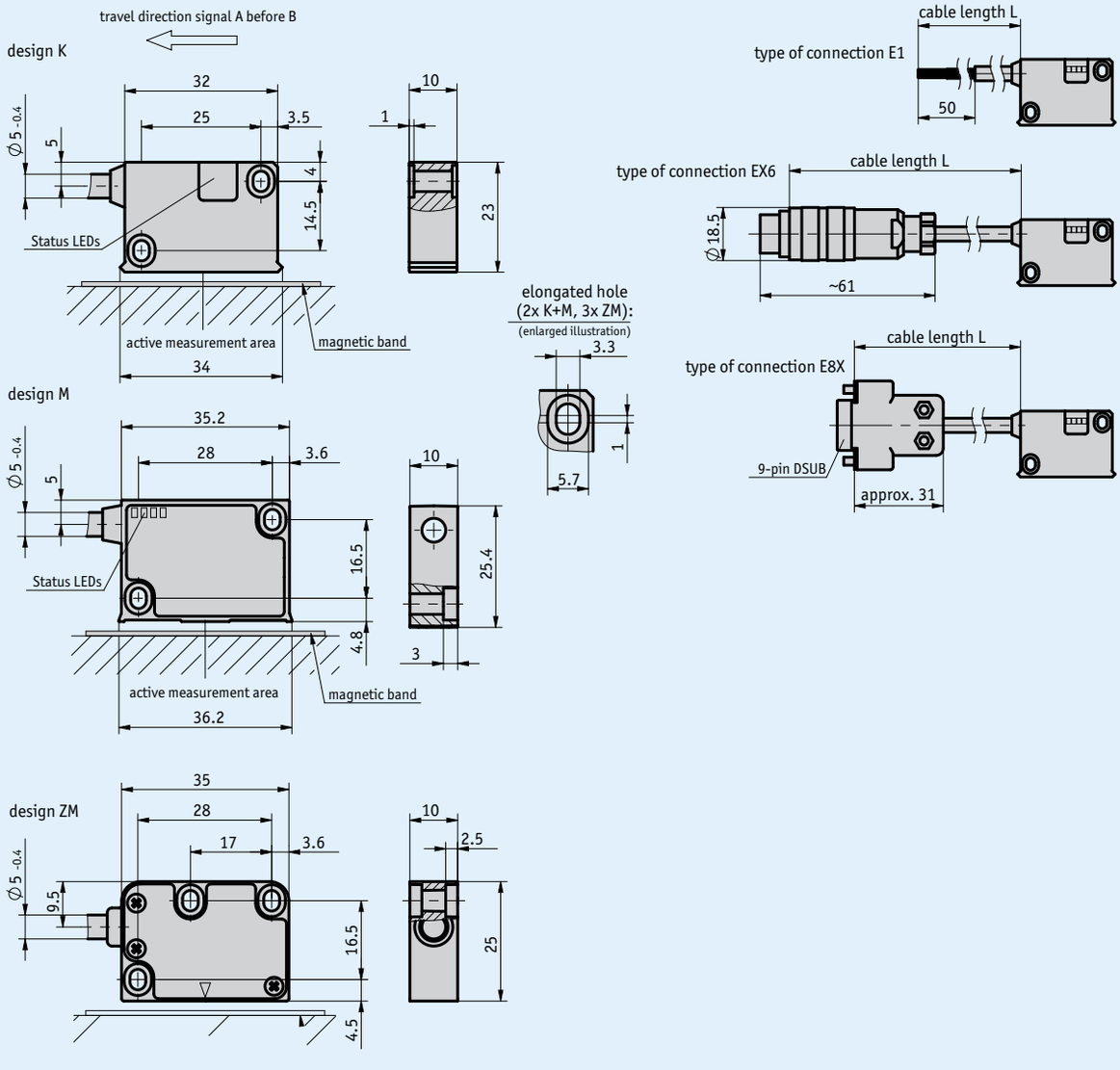

Mechanical data

Feature	Technical data	Additional information
Housing	synthetic material ABS black	K design
	zinc die-cast/aluminum	M design, aluminum front cover
	zinc die-cast	ZM design
Sensor/band reading distance	0.1 ... 2 mm	O, I reference signals
	0.1 ... 1.5 mm	R reference signal
Cable sheath	PUR, suitable for drag-chain use	6, 8-wire ø$5_{-0.4}$ mm

Travel speed

		Travel speed Vmax [m/s]									
Resolution [mm]	**0.001**	4.00	3.20	1.60	0.80	0.32	0.20	0.10	0.05	0.03	0.01
	0.005	20.00	16.00	8.00	4.00	1.60	1.00	0.50	0.25	0.13	0.06
	0.010	25.00	25.00	16.00	8.00	3.20	2.00	1.00	0.50	0.25	0.12
	0.025	25.00	25.00	25.00	20.00	8.00	5.00	2.50	1.25	0.63	0.30
	0.050	25.00	25.00	25.00	25.00	16.00	10.00	5.00	2.50	1.25	0.61
	0.100	25.00	25.00	25.00	25.00	25.00	20.00	10.00	5.00	2.50	1.21
Pulse interval [µs]		0.20	0.25	0.50	1.00	2.50	4.00	8.00	16.00	32.00	66.00
Counting frequency [kHz]		1250.00	1000.00	500.00	250.00	100.00	62.50	31.25	15.63	7.81	3.79

Electrical data

Feature	Technical data	Additional information
Operating voltage	6.5 ... 30 V DC	reverse polarity protected
	4.75 ... 6 V DC	without reverse polarity protection
Current consumption	<25 mA	at 24 V DC, unloaded
	<75 mA	loaded
Output circuit	PP, LD (RS422)	
Output signals	A, /A, B, /B, I, /I bzw. R, /R	
Output signal level high	>UB - 2.5 V	PP
	>2.5 V	LD
Output signal level low	<0.8 V	
Pulse width of reference signal	1 or 4 increment(s)	
Real-time requirement	speed-proportional signal output	
Type of connection	open cable end	
	plug connector	7/8-pole
	D-Sub	9-pole

Signal pattern

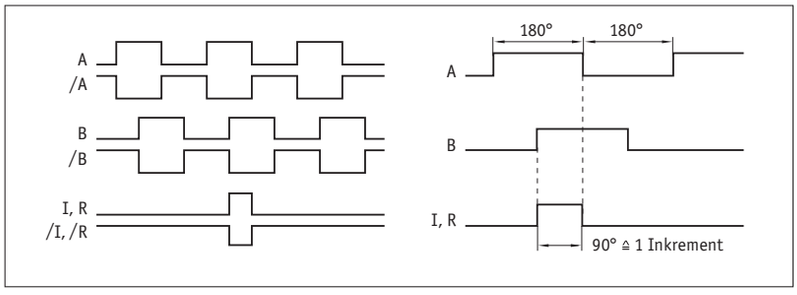

The logical condition of signals A and B is not defined in reference to the index signal I or the reference signal R. It can deviate from the signal form.

Reference or index signal with 4 increments (360°) signal length is only valid from the 5th counting step onwards. A corresponding delay should be taken into consideration after switching on the operating voltage.

Pulse interval

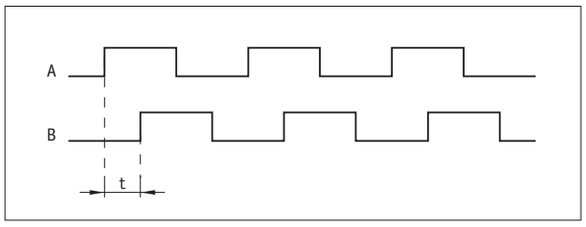

Example: Pulse interval t = 1 µs
(i. e., the downstream unit must be able to process 250 kHz)

Formula for counting frequency = $\frac{1}{1\ \mu s \times 4}$ = 250 kHz

System data

Feature	Technical data	Additional information
Resolution	0.001, 0.005, 0.01, 0.025, 0.05, 0.1 mm	
System accuracy	± (0.025 + 0.01 x L) mm, L in m	
Repeat accuracy	±10 µm	
Measuring range	∞	
Travel speed	depending on resolution and pulse interval	see table

Ambient conditions

Feature	Technical data	Additional information
Ambient temperature	-10 ... 70 °C	
Storage temperature	-30 ... 80 °C	
Relative humidity	100 %	condensation admissible
EMC	EN 61000-6-2	interference resistance / immission
	EN 61000-6-4	emitted interference / emission
Protection category	IP67	EN 60529
Shock resistance	500 m/s^2, 11 ms	EN 60068-2-27
Vibration resistance	100 m/s^2, 5 ... 150 Hz	EN 60068-2-6

Pin assignment

5.2

Inverted without reference signalal

Signal	E1	E6X	E8X
A	red	1	1
B	orange	2	2
nc		3	3
+UB	brown	4	4
GND	black	5	5
/A	yellow	6	6
/B	green	7	7
nc			8
nc			9

Inverted with reference signal

Signal	E1	E6X	E8X
A	red	1	1
B	orange	2	2
I,R	blue	3	3
+UB	brown	4	4
GND	black	5	5
/A	yellow	6	6
/B	green	7	7
/I, /R	violet	8	8
nc			9

Hint for mounting

For systems with reference points on the magnetic tape please take care that sensor and strip are correctly aligned (see picture).

Reference signal	O, I	R
A, Sensor/tape reading distance	≤2 mm	≤1.5 mm
B, Lateral offset	±2 mm	±0.5 mm
C, Alignment error	±3°	±3°
D, Longitudinal inclination	±1°	±1°
E, Lateral inclination	±3°	±3°

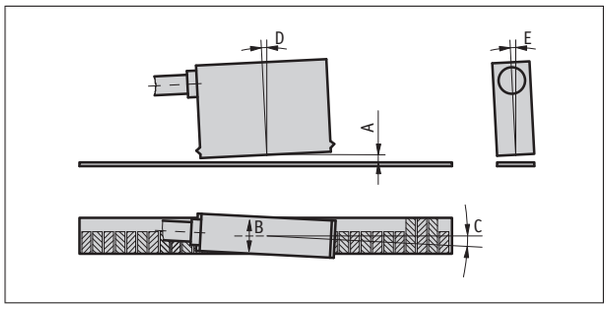

Symbolic representation

Order

Ordering information

one or more system components are required:

Magnetic band MB500/1 page 58

Ordering table

Feature	Ordering data		Specification	Additional information
Operating voltage	10	A	6.5 ... 30 V DC	
	11		4.75 ... 6 V DC	
Design	K	B	plastic housing	
	M		metal housing with status LEDs	
	ZM		metal housing without status LEDs	
Type of connection	E1	C	open cable end	
	E6X		bullet connector without mating connector	
	E8X		D-SUB 9-pin without mating connector	
			extension cables on request	
Cable length	...	D	01.0 ... 20 m, in steps of 1 m	
			others on request	
Output circuit	PP	E	push-pull	
	LD		Line Driver	
Reference signal	0	F	without	
	I		periodic index	index signal every 5 mm
	R		fixed reference	
Resolution	...	G	0.001, 0.005, 0.01, 0.025, 0.5, 0.1	
			others on request	
Pulse interval	...	H	0.2, 0.25, 0.5, 1.00, 2.5, 4, 8, 16, 32, 66	

Order key

MSK5000 linear - [A] - [B] - [C] - [D] - [E] - [F] - [G] - [H]

Scope of delivery: *MSK5000 linear, Mounting instructions, Sensor fastening set*

Additional information:

Quick start, technical details *page 50*
Product overview *page 6*

subject to technical alteration • 2015/10/09 • 10:25 • K

Magnetic sensor MS500
Passive sensor, incremental, miniature design

Profile

- Compact design of sensor and connector
- To be connected to MA502 or MA506
- Works with magnetic tape MB500/1, MR500, MBR500
- Reading distance ≤2 mm

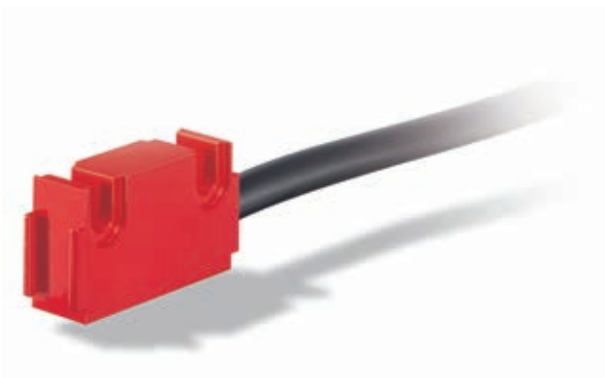

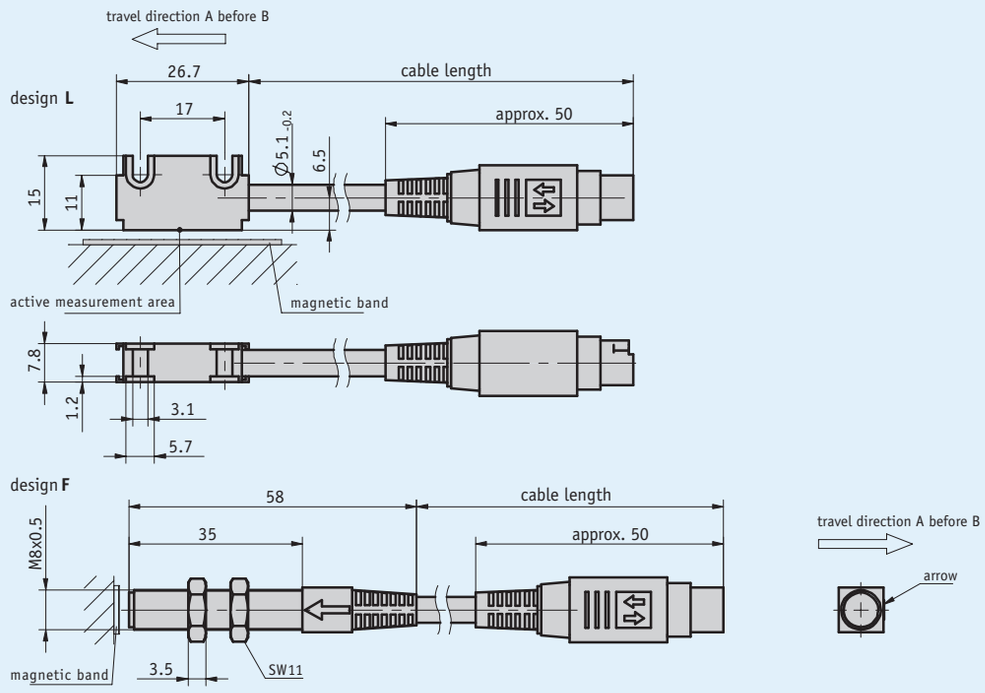

Mechanical data

Feature	Technical data	Additional information
Housing	aluminum red	Bauform L
	steel	F design
Sensor/band reading distance	0.1 ... 2 mm	
Cable sheath	PUR, PVC	6-adrig ø5.1 $_{-0.2}$ mm

Electrical data

Feature	Technical data	Additional information
Operating voltage	supply via measurement display / downstream electronic unit	
Current consumption	supply via measurement display / downstream electronic unit	
Type of connection	mini-DIN	6-pole, 1x pin

System data

Feature	Technical data	Additional information
System accuracy	depending on downstream electronic unit	
Repeat accuracy	depending on downstream electronic unit	
Travel speed	≤5 m/s depending on downstream electronic unit	

Ambient conditions

Feature	Technical data	Additional information
Ambient temperature	0 ... 60 °C	
Storage temperature	-20 ... 70 °C	
Relative humidity	100 %	condensation admissible (sensor head)
Protection category	IP67	EN 60529 (sensor head)
Shock resistance	2000 m/s^2, 11 ms	EN 60068-2-27
Vibration resistance	200 m/s^2, 50 Hz ... 2 kHz	EN 60068-2-6

Hint for mounting

A, Sensor/tape reading distance	≤2 mm
B, Lateral offset	±2 mm
C, Alignment error	±3°
D, Longitudinal inclination	±1°
E, Lateral inclination	±3°

The length of the cable between the sensor and connector cannot be subsequently increased or decreased.

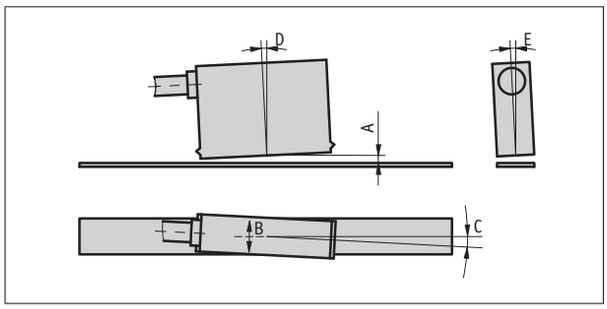

Symbolic representation

Order

Ordering information

one or more system components are required:

Magnetic band MB500/1	page 58
Magnetic ring MR500	page 152
Magnetic band ring MBR500	page 162
Electronic display MA502	page 75
Electronic display MA506	page 78
Translation module AS510/1	page 80

Ordering table

Feature	Ordering data		Specification	Additional information
Design	L	A	rectangular	
	F		round	
Cable sheath	PVC	B		
	PUR		oil-resistant	
Cable length	...	C	00.2 ... 20.0 m, in intervals of 1 m	

Order key

MS500 - [A] - [B] - [C]

5.2

Scope of delivery: *MS500, User information, Fastening set*

Additional information:

Quick start, technical details *page 50*
Product overview *page 6*

subject to technical alteration • 2015/10/09 • 10:25 • K

Electronic display MA502
incremental, LCD dot matrix display, display accuracy 10 µm

Profile

- Display accuracy max. 10 µm
- Repeat accuracy max. ±0.01 mm
- High-contrast LCD, 12-digit LCD dot matrix
- Incremental measurement and reset function
- Direct reference/offset value input
- Reference input
- Programmable actual-value memory
- Works with sensor MS500
- Option: serial interface RS232/RS485
- Option: 2 measurement channels
- Option: TG01 bench housing

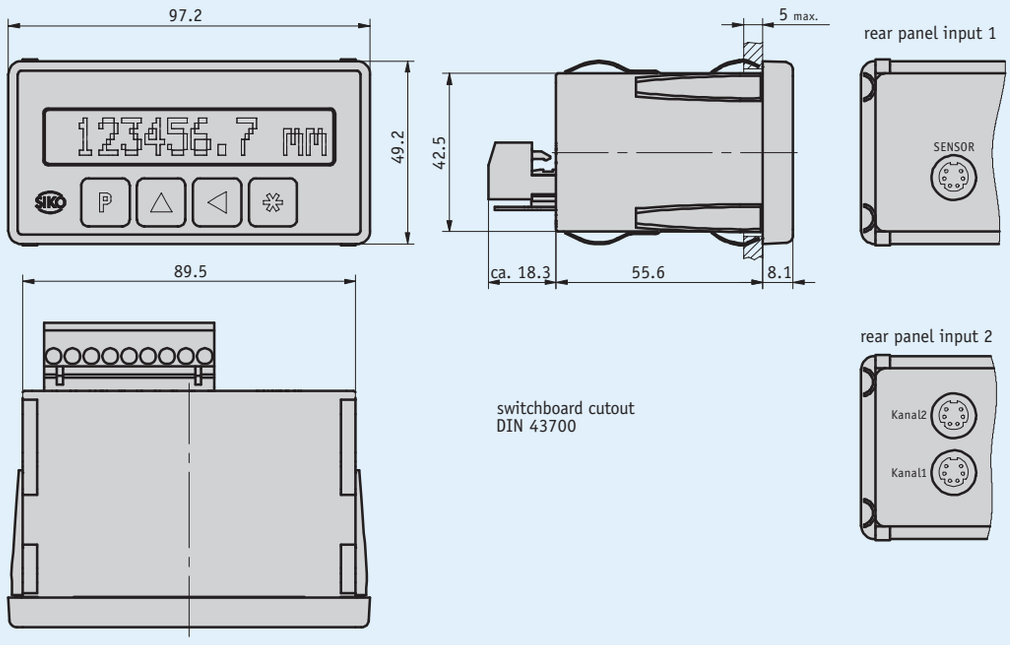

Mechanical data

Feature	Technical data	Additional information
Housing design	built-in housing, plastic	switchboard cutout $92^{+0.8}$ x $45^{+0.6}$ IEC 61554

Electronic display MA502
incremental, LCD dot matrix display, display accuracy 10 µm

Electrical data

Feature	Technical data	Additional information
Operating voltage	24 V DC ±20 %	
	115 V AC ±10 %	
	230 V AC ±10 %	
Current consumption	70 mA	at 24 V DC
	20 mA	at 115 V AC
	10 mA	at 230 V AC
Display/dispaly range	12-digit, LCD dot matrix, backlit	-9999999 ... 9999999
Switching outputs	with or without	2x 30 V ≤100 mA
Interface	without, RS232, RS485	
Type of connection	connector	9-pole (supply, switching output, interface/reference conection)
	mini-DIN	6-pole, 1x socket (MS500 sensor)

System data

Feature	Technical data	Additional information
Resolution	0.01, 0.1, 1, 10 mm	linear distance measurement
	0.001, 0.01, 0.1, 1 inch	
	0°-90°-0° / 0°-360°	angle measurement, ≤0.001°
System accuracy	±(0.05 + 0.01 x L) mm; L in m	at T_U = 20 °C
Repeat accuracy	±0.01 mm	±1 increment
Travel speed	≤5 m/s	

5.2

Ambient conditions

Feature	Technical data	Additional information
Ambient temperature	0 ... 50 °C	
Storage temperature	-20 ... 80 °C	
Relative humidity	≤95 %	condensation inadmissible
EMC	EN 61000-6-2	interference resistance / immission
	EN 61000-6-4	emitted interference / emission
Protection category	IP40 whole device	EN 60529
	IP60 at the front with switchboard installation	EN 60529

Pin assignment

Signal	PIN
Reset	1
+24 V DC; ≤50 mA (refeerence switch)	2
GND	3
nc	4
RS232 (RXD), RS485 (DÜB), actor A2	5
RS232 (TXD), RS485 (DÜA), actor A1	6
PE	7
N (230/115 V AC); GND (24 V DC)	8
L (230/115 V AC); +UB (24 V DC)	9

Order

Ordering information

one or more system components are required:

Magnetic sensor MS500 page 72

Ordering table

Feature	Ordering data		Specification	Additional information
Operating voltage	1	A	230 V AC	
	2		115 V AC	
	4		24 V DC	
Interface/protocol	XX/XX	B	without	
	S1/00		RS232 with standard protocol	
	S3/00		RS485 with standard protocol	
Switching output	S0	C	without	
	SM		with	only with XX/XX interface
Input	1	D	one channel	
	2		two channels	
Software	S	E		
	SW01		for 2 channels	

Order key

MA502 - EG - [A] - RM - [B] - [C] - [D] - [E] - BS

Scope of delivery: *MA502, Mounting instructions*

Accessories:

Table-top housing TG01 *www.siko-global.com*

Additional information:

Quick start, technical details *page 50*

Product overview *page 6*

subject to technical alteration • 2015/10/09 • 10:25 • K

Electronic display MA506
incremental, LED display, display accuracy 10 µm

Profile

- Display accuracy max. 10 µm
- Repeat accuracy max. ±0.01 mm
- Incremental measurement and reset function
- Direct reference/offset value input
- Reference input
- Works with sensor MS500

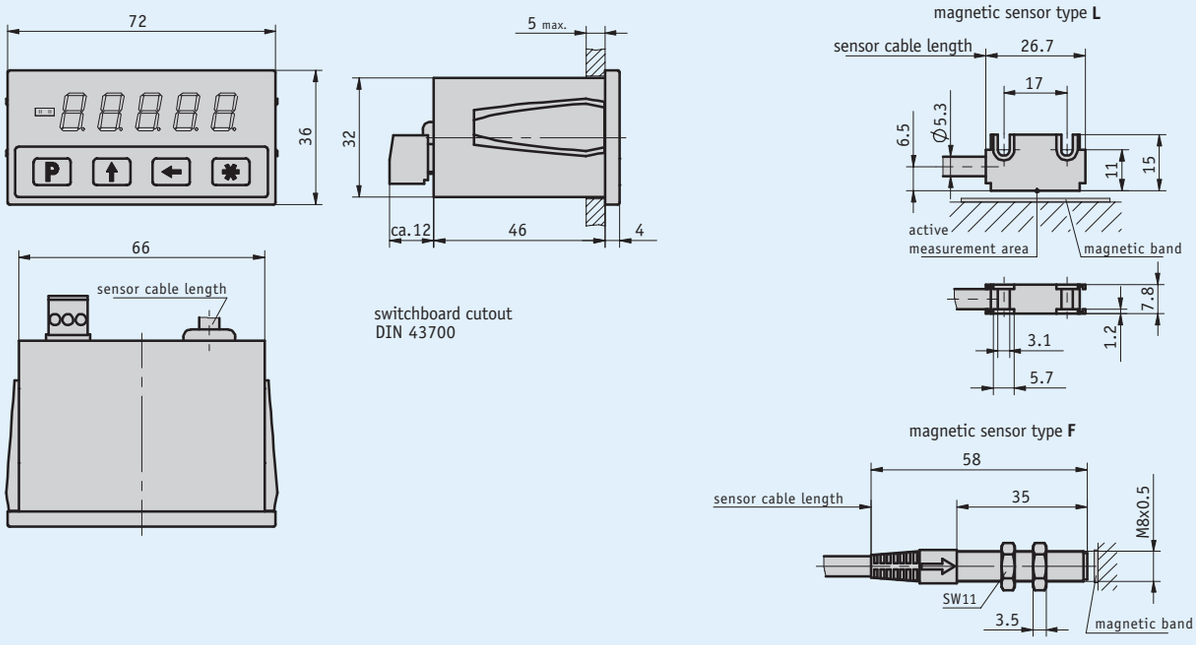

Mechanical data

Feature	Technical data	Additional information
Housing design	built-in housing, plastic (transparent red)	switchboard cutout $68^{+0.7}$ x $33^{+0.6}$ IEC 61554

Electrical data

Feature	Technical data	Additional information
Operating voltage	24 V DC ±20 %	
	230 V AC+6/ -10 %	only TGL design
Current consumption	<60 mA	at 24 V DC
Display/dispaly range	5-digit, LED 7-segment, 10 mm height red	-99999 ... 99999
Type of connection	screw terminal	3-pole (supply)
	mini-DIN	6-pole, 1x socket (MS500 sensor)

System data

Feature	Technical data	Additional information
Resolution	0.01, 0.05, 0.1, 1 mm	programmable angle display
	0.001, 0.01 inch	
System accuracy	±(0.1 + 0.01 x L) mm, L in m	at T_U = 20 °C
Repeat accuracy	±0.01 mm	±1 digit
Travel speed	≤5 m/s	

Ambient conditions

Feature	Technical data	Additional information
Ambient temperature	0 ... 50 °C	
Storage temperature	-20 ... 85 °C	
Relative humidity	≤95 %	condensation inadmissible
EMC	EN 61000-6-2	interference resistance / immission
	EN 61000-6-4	emitted interference / emission
Protection category	IP40 whole device	EN 60529
	IP60 at the front with switchboard installation	EN 60529

Pin assignment

Signal
GND
+UB
Reset

5.2

Order

Ordering information

one or more system components are required:

Magnetic sensor MS500 page 72

Ordering table

Feature	Ordering data		Specification	Additional information
Operating voltage	4	A	24 V DC	
	1		230 V as bench housing on request	
Sensor connection	S	B	pluggable	delivery without MS500 sensor
	M		permanently mounted	
Magnetic sensor type	0S	C	without sensor	delivery without MS500 sensor
	L		L design	
	F		F design	
Sensor cable length	...	D	01.0 ... 20.0 m, in intervals of 1 m	only with M sensor connection

Order key

MA506 - EG - [A] - [B] - [C] - [D]

Scope of delivery: *MA506, Mounting instructions*

Additional information:

Quick start, technical details *page 50*
Product overview *page 6*

subject to technical alteration • 2015/10/09 • 10:25 • K

Translation module AS510/1
Incremental, interface, resolution 5 µm

Profile

- Parameters adjustable via DIP switches
- Resolution up to 5 µm
- Reference signal with intervals of 5 mm
- Works with sensor MS500

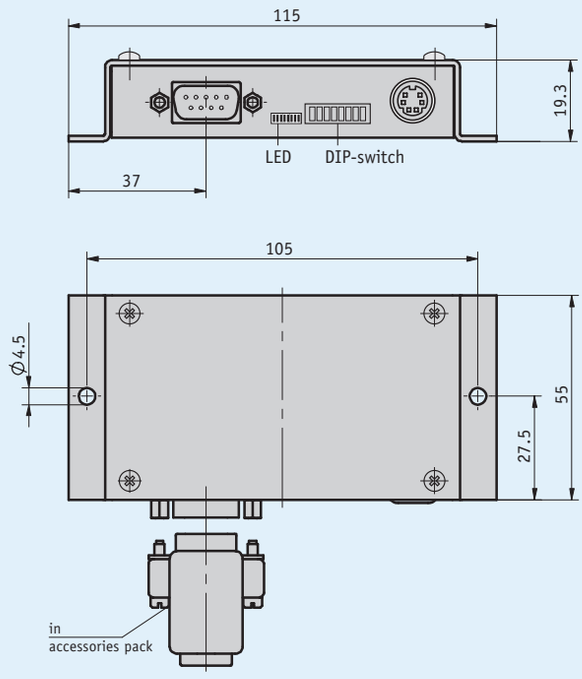

Mechanical data

Feature	Technical data	Additional information
Housing	steel sheet	electrogalvanized

Electrical data

Feature	Technical data	Additional information
Operating voltage	24 V DC ±20 %	reverse polarity protected
	5 V DC±5 %	no reverse polarity protection
Current consumption	<70 mA	
Output circuit	PP, LD (RS422)	switchover via DIP switches
Output signals	A, A/, B, B/, 0, 0/	
Real-time requirement	speed-proportional signal output	
Type of connection	D-Sub	9-pole (supply and signal output)
	mini-DIN	6-pole socket (sensor)

System data

Feature	Technical data	Additional information
Resolution	5, 10, 20, 25, 50, 100 µm	with quadruple evalution selectable via DIP switch
System accuracy	±(0.025 + 0.01 x L) mm, L in m	at T_U = 20 °C (with MB500 and 0.05 mm accuracy class)
Repeat accuracy	±1 increment(s)	
Travel speed	≤20 m/s	sensor

Ambient conditions

Feature	Technical data	Additional information
Ambient temperature	0 ... 70 °C	
Storage temperature	-20 ... 70 °C	
Relative humidity	≤95 %	condensation inadmissible
EMC	EN 61000-6-2	interference resistance / immission
	EN 61000-6-4	emitted interference / emission
Protection category	IP40	EN 60529

Pin assignment

Signal	PIN
A	1
A/	2
GND (for output signal)	3
B	4
B/	5
0	6
0/	7
+UB	8
GND (for supply)	9

Order

Ordering information

one or more system components are required:

Magnetic sensor MS500 page 72

Ordering table

Feature	Ordering data		Specification	Additional information
Operating voltage	4	A	24 V DC	reverse polarity protected
	5		5 V DC	no reverse polarity protection

Order key

AS510/1 - [ ]
A

Scope of delivery: *AS510/1, User information*

Additional information:

Quick start, technical details *page 50*
Product overview *page 6*

subject to technical alteration • 2015/10/09 • 10:25 • K

Magnetic band MBA
Absolutely coded scale, measuring length 5 m

Profile

- Easy adhesive mounting, self-assembly possible
- Available lengths up to 75 m

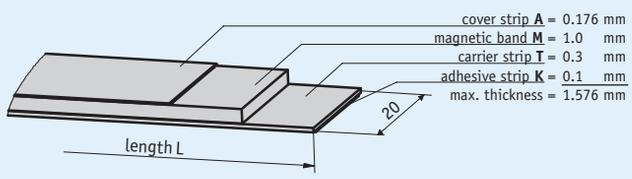

5.2

Mechanical data

Feature	Technical data	Additional information
Material	stainless steel	cover strip
Band width	20 mm	
Band thickness	1.4 mm	without cover strip
Mounting type	adhesive connection	double-sided tape premounted
Accuracy class	±50 µm	at T_U = 20 °C

System data

Feature	Technical data	Additional information
Measuring range	≤5120 mm	

Ambient conditions

Feature	Technical data	Additional information
Ambient temperature	-20 ... 70 °C	
Storage temperature	-40 ... 70 °C	
Expansion coefficient	(11 ±1) x 10^{-6}/K	
Relative humidity	100 %	condensation admissible

Order

Ordering information

The necessary tape length is calculated from:
Measured distance + sensor length "S" + (2 x forerun or overrun "B", resp.).

S	see the drawing of the sensor used
B	5 mm (forerun and overrun)

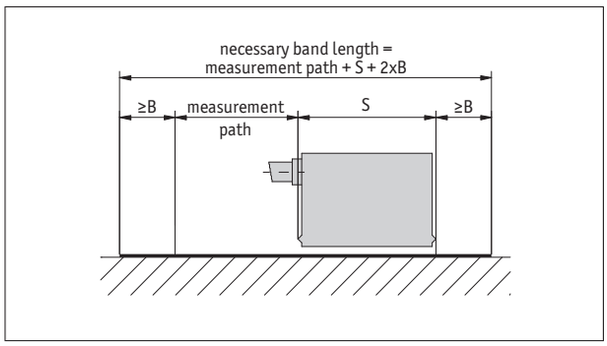

Symbolic representation

Ordering table

Feature	Ordering data		Specification	Additional information
Length	...	A	00.200 ... 75.0 m, in intervals of 0.1 m	ordering detail, see "Ordering information"
Adhesive carrier tape	TM	B	with	
	TO		without	
Cover strip	AM	C	with	
	AO		without	

Order key

MBA - [ ] - [ ] - [ ]
A B C

5.2

Scope of delivery: *MBA*

Accessories:
Profile Rail PSA *page 187*

Additional information:
Quick start, technical details *page 50*
Product overview *page 6*

subject to technical alteration • 2015/10/09 • 10:25 • K

Magnetic band MBA501
Absolutely coded scale, measuring length 10 m

Profile

- Easy adhesive mounting, self-assembly possible
- Available lengths up to 75 m

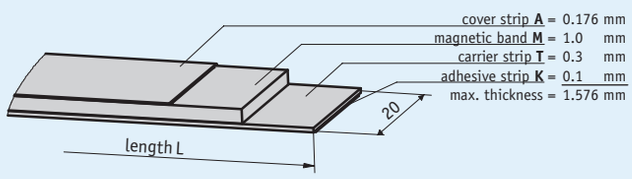

Mechanical data

Feature	Technical data	Additional information
Material	stainless steel	cover strip
Band width	20 mm	
Band thickness	1.4 mm	without cover strip
Mounting type	adhesive connection	double-sided tape premounted
Accuracy class	±50 µm	at T_U = 20 °C

System data

Feature	Technical data	Additional information
Measuring range	≤10240 mm	

Ambient conditions

Feature	Technical data	Additional information
Ambient temperature	-20 ... 70 °C	
Storage temperature	-40 ... 70 °C	
Expansion coefficient	(11 ±1) x 10^{-6}/K	
Relative humidity	100 %	condensation admissible

Order

Ordering information

The necessary tape length is calculated from:
Measured distance + sensor length "S" + (2 x forerun or overrun "B", resp.).

S	see the drawing of the sensor used
B	5 mm (forerun and overrun)

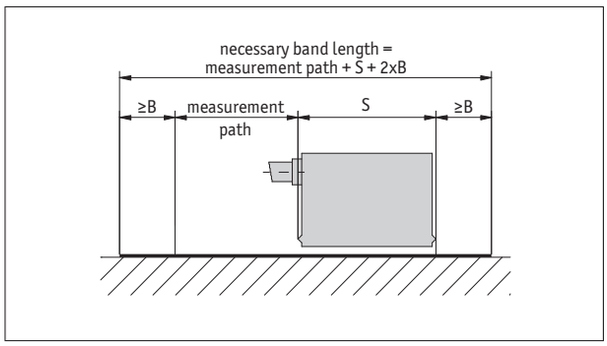

Symbolic representation

Ordering table

Feature	Ordering data		Specification	Additional information
Length	...	A	00.20 ... 75.0 m, in intervals of 0.1 m	ordering detail, see "Ordering information"
Adhesive carrier tape	TM	B	with	
	TO		without	
Cover strip	AM	C	with	
	AO		without	

Order key

MBA501 - [A] - [B] - [C]

Scope of delivery: *MBA501*

Accessories:
Profile Rail PSA *page 187*

Additional information:
Quick start, technical details *page 50*
Product overview *page 6*

subject to technical alteration • 2015/10/09 • 10:25 • K

Magnetic band MBA511
Absolutely coded scale, measuring length 20 m

Profile

- Easy adhesive mounting, self-assembly possible
- Available lengths up to 75 m

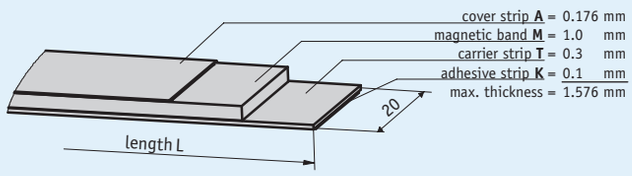

Mechanical data

Feature	Technical data	Additional information
Material	stainless steel	cover strip
Band width	20 mm	
Band thickness	1.4 mm	without cover strip
Mounting type	adhesive connection	double-sided tape premounted
Accuracy class	±100 µm	at T_U = 20 °C

System data

Feature	Technical data	Additional information
Measuring range	≤20480 mm	

Ambient conditions

Feature	Technical data	Additional information
Ambient temperature	-20 ... 70 °C	
Storage temperature	-40 ... 70 °C	
Expansion coefficient	(11 ±1) x 10^{-6}/K	
Relative humidity	100 %	condensation admissible

Order

Ordering information

The necessary tape length is calculated from:
Measured distance + sensor length "S" + (2 x forerun or overrun "B", resp.).

S	see the drawing of the sensor used
B	5 mm (forerun and overrun)

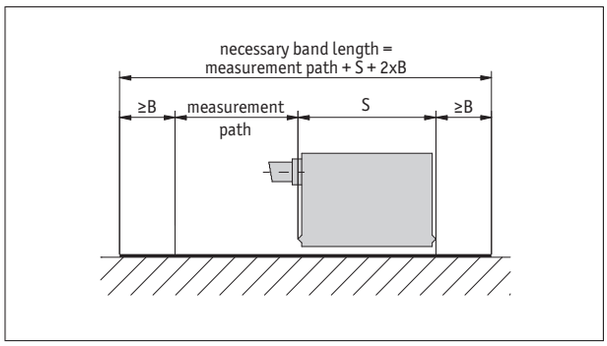

Symbolic representation

Ordering table

Feature	Ordering data		Specification	Additional information
Length	...	A	00.5 ... 75.0 m, in intervals of 0.1 m	ordering detail, see "Ordering information"
Adhesive carrier tape	TM	B	with	
	TO		without	
Cover strip	AM	C	with	
	AO		without	

Order key

MBA511 - [A] - [B] - [C]

Scope of delivery: *MBA511*

Accessories:
Profile Rail PSA *page 187*

Additional information:
Quick start, technical details *page 50*
Product overview *page 6*

subject to technical alteration • 2015/10/09 • 10:25 • K

Magnetic sensor MSA
Absolute, sensor for MA505 and MA561

Profile

- To be connected to magnetic displays MA505 and MA561
- Max. resolution depends on downstream electronics unit
- Repeat accuracy depends on downstream electronics unit
- Reading distance ≤1 mm
- Max. measuring length 5120 mm

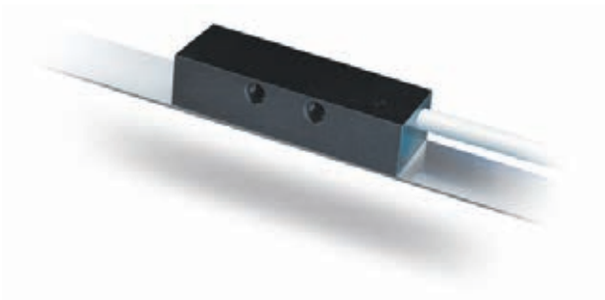

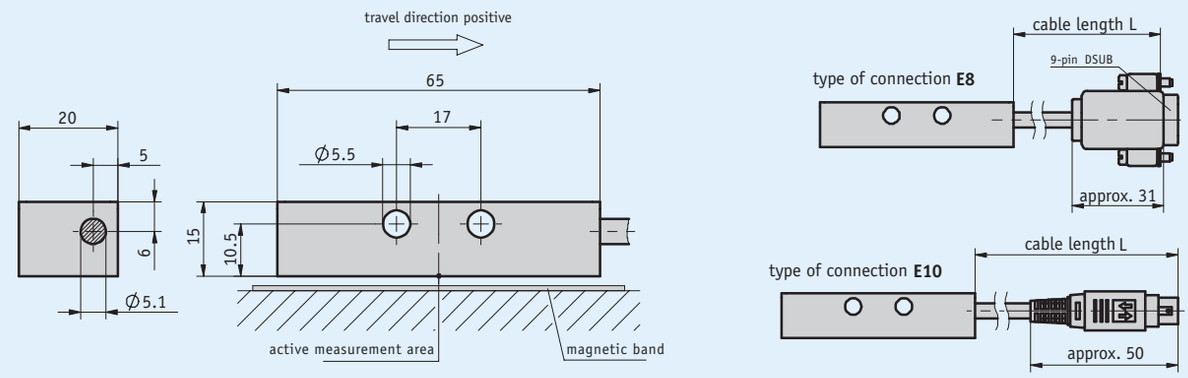

Mechanical data

Feature	Technical data	Additional information
Housing	aluminum uncoated chromated	
Sensor/band reading distance	≤1 mm	
Cable sheath	PVC	

Electrical data

Feature	Technical data	Additional information
Operating voltage	supply via downstream electronic unit	
Current consumption	see downstream electronics	
Type of connection	D-Sub	9-pole, 1x pin (E8 type of connection)
	mini-DIN	8-polig, 1x Stift (Anschlussart E10)

System data

Feature	Technical data	Additional information
Resolution	depending on display / downstream electronic unit	
System accuracy	(0.05 + 0.03 x L), L in m	
Repeat accuracy	0.01 mm	
Measuring range	≤5120 mm	
Travel speed	≤5 m/s	

Ambient conditions

Feature	Technical data	Additional information
Ambient temperature	0 ... 60 °C	
Storage temperature	-20 ... 80 °C	
Relative humidity	100 %	condensation admissible
Protection category	IP67	EN 60529
Shock resistance	500 m/s^2, 11 ms	EN 60068-2-27
Vibration resistance	100 m/s^2, 5 ... 150 Hz	EN 60068-2-6

Pin assignment

Signal	PIN E8	PIN E10
nc	1	2
LK14A	2	1
SENS DATA	3	3
LK14B	4	5
nc	5	
CLK	6	4
+5V	7	8
GND	8	6
STR	9	7

Hint for mounting

When mounting sensor and magnetic tape, please be careful to align both system components correctly. The arrow marks on the tape and sensor must point in the same direction when mounting the components.

A, Sensor/tape reading distance	≤1 mm
B, Lateral offset	±1 mm
C, Alignment error	±2°
D, Longitudinal tilt	±1°
E, Lateral tilt	±3°

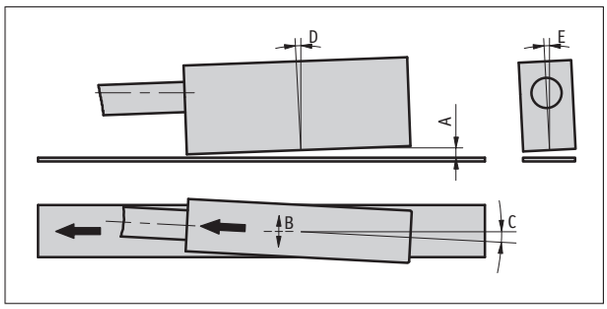

symbolic sensor representation

Order

Ordering information

one or more system components are required:

Magnetic band MBA	page 82
Electronic display MA505	page 97
Electronic display MA561	page 100

Ordering table

Feature	Ordering data		Specification	Additional information
Type of connection	E8	A	D-SUB	
	E10		mini-DIN connector	
Cable length	...	B	01.0 ... 20 m, in intervals of 1 m	
			others on request	

Order key

MSA - [A] - [I] - [ ] - [ ]
A B

5.2

Scope of delivery: *MSA, User information, Fastening set, snap ferrite on sensor cable*

Additional information:

Quick start, technical details *page 50*
Product overview *page 6*

subject to technical alteration • 2015/10/09 • 10:25 • K

Profile

- Max. resolution of 5 µm absolute, 1 µm incremental
- Repeat accuracy of 0.005 mm
- SSI, RS485, CANopen output circuits
- Additional incremental signals LD as an option (SSI, RS485)
- Reading distance ≤1.3 mm
- Max. measuring length 10240 mm
- status LEDs for diagnosis

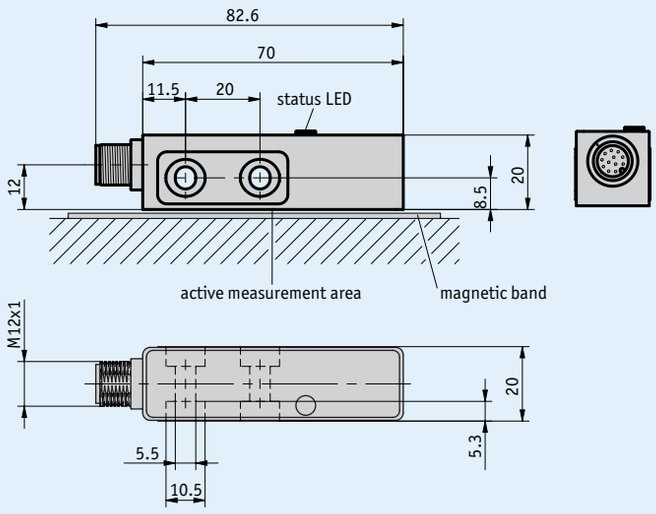

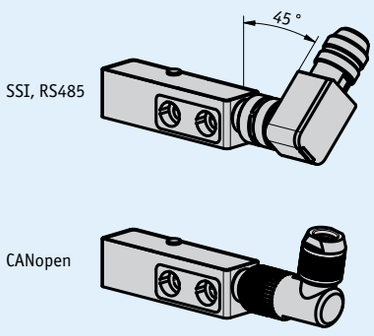

5.2

Mechanical data

Feature	Technical data	Additional information
Housing	zinc die-cast	
Sensor/band reading distance	≤1.3 mm	

Electrical data

Feature	Technical data	Additional information
Operating voltage	4.5 ... 30 V DC	
Power input	<1.5 W	
SSI clock speed input	≤750 kHz	depending in cable length
Output circuit	without, LD (RS422)	
Interface	SSI, RS485	
	CANopen	Spec. 2.0A, DS 301, DS 406, ISO 11898
Baud rate	0.05 ... 1 MBit/s	CANopen
Cycle time	<25 µs	SSI/RS485
	<40 µs	CANopen
Type of connection	M12 plug connector (A-coded)	12-pole, 1x pin
	M12 plug connector (A-coded)	5 poles, 1x pin (CANopen)

System data

Feature	Technical data	Additional information
Resolution	5, 10 µm	absolute
	10 µm	absolute, CANopen factory setting, reconfigurable to 5 µm
	1, 5, 10 µm	incremental
System accuracy	±(0.02 + 0.03 x L) mm, L in m	bei T_U = 20 °C
Repeat accuracy	≤5 µm; ±1 digit	at T_U = 20 °C
Measuring range	≤10240 mm	
Travel speed	≤5 m/s	absolute
	see table	incremental

Travel speed incremental

		Travel speed Vmax [m/s]								
Resolution [mm]	**0.001**	4.00	1.60	0.80	0.32	0.20	0.10	0.05	0.03	0.01
	0.005	20.00	8.00	4.00	1.60	1.00	0.50	0.25	0.13	0.06
	0.010	25.00	16.00	8.00	3.20	2.00	1.00	0.50	0.25	0.13
Pulse interval [µs]		0.20	0.50	1.00	2.50	4.00	8.00	16.00	32.00	66.00
Counting frequency [kHz]		1250.00	500.00	250.00	100.00	62.50	31.25	15.63	7.81	3.79

Ambient conditions

Feature	Technical data	Additional information
Ambient temperature	-30 ... 85 °C	
Storage temperature	-40 ... 85 °C	
Relative humidity	100 %	condensation admissible
EMC	EN 61000-6-2	interference resistance / immission
	EN 61000-6-4	emitted interference / emission
Protection category	IP67	EN 60529, mating connector mounted
Shock resistance	500 m/s², 11 ms	EN 60068-2-27
Vibration resistance	100 m/s², 5 ... 150 Hz	EN 60068-2-6

Pin assignment

SSI, RS485 without LD

SSI	RS485	PIN
nc	nc	1
D+	DÜA	2
D-	DÜB	3
T-	nc	4
+UB	+UB	5
nc	nc	6
nc	nc	7
nc	nc	8
nc	nc	9
config	config	10
T+	nc	11
GND	GND	12

SSI, RS485 with LD

SSI	RS485	PIN
nc	nc	1
D+	DÜA	2
D-	DÜB	3
T-	nc	4
+UB	+UB	5
/A	/A	6
A	A	7
/B	/B	8
B	B	9
config	config	10
T+	nc	11
GND	GND	12

CANopen

Signal	PIN
CAN_GND*	1
+UB	2
GND*	3
CAN_H	4
CAN_L	5

* CAN_GND internally connected to GND

Hint for mounting

When mounting sensor and magnetic tape, please be careful to align both system components correctly. The arrow marks on the tape and sensor must point in the same direction when mounting the components.

A, Sensor/tape reading distance	≤1.3 mm
B, Lateral offset	±3 mm
C, Alignment error	±1.5°
D, Longitudinal tilt	±1°
E, Lateral tilt	±4°

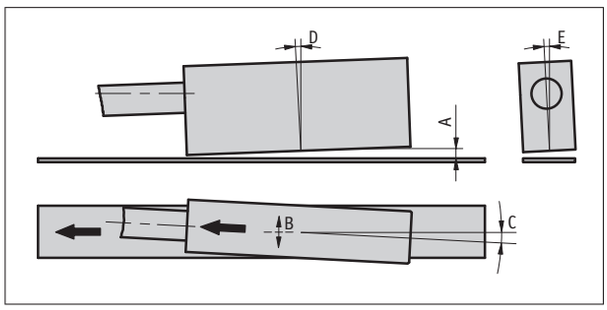

symbolic sensor representation

Order

Ordering information

one or more system components are required:

Magnetic band MBA501 page 84

Ordering table

Feature	Ordering data		Specification	Additional information
Interface	RS485	A	SIKONETZ3	
	SSI		SSI, RS422	
	CAN		CANopen	
Absolute resolution	5	B	5 µm	
	10		10 µm	CANopen factory setting
Output circuit	0	C	without LD	
	LD		LD, RS422 incremental	only with SSI, RS485
Incremental resolution	1	D	1 µm	only with LD output circuit
	5		5 µm	only with LD output circuit
	10		10 µm	only with LD output circuit
Pulse interval	...	E	0.2, 0.5, 1.0, 2.5, 4.0, 8.0, 16.0, 32.0, 66.0 in µs	

Order key

MSA501 - [ ] A - [ ] B - [ ] C - [ ] D - [ ] E - S

Scope of delivery: *MSA501, Mounting instructions, Fastening set*

Accessories:

Profile Rail PSA	*page 187*
Cable extension KV12S2	*page 192*
Mating Connector Overview	*page 188*
Mating connector, SSI, RS485, 12-pole, socket	*Order key 85277*
Mating connector, SSI, RS485, 12-pole, angular socket	*Order key 85278*
Mating connector, CANopen, 5-pole, socket	*Order key 84109*
Mating connector, CANopen, 5-pole, angle socket	*Order key 83006*

Additional information:

Quick start, technical details	*page 50*
Product overview	*page 6*

subject to technical alteration • 2015/10/09 • 10:25 • K

Magnetic sensor MSA511
Absolute, SSI interface, resolution 10 µm

Profile

- Max. resolution 10 µm
- Repeat accuracy 0.01 mm
- SSI, RS485 output circuits
- Reading distance ≤2 mm
- Max. measuring length 20480 mm

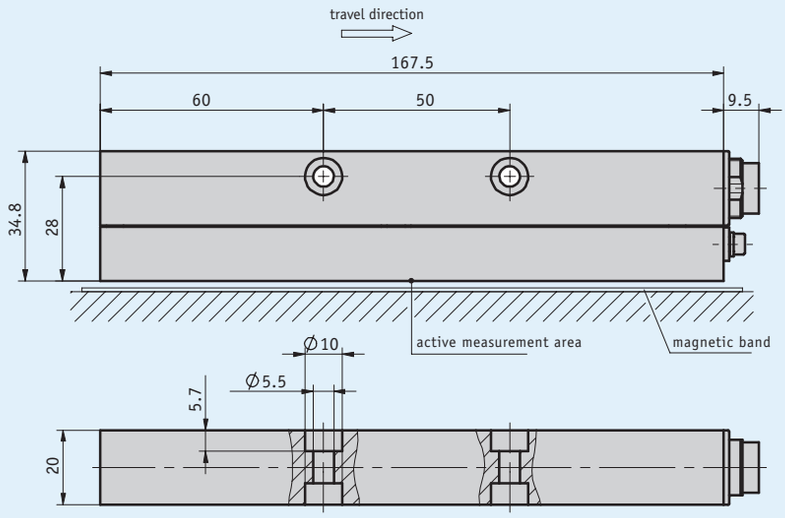

Mechanical data

Feature	Technical data	Additional information
Housing	aluminum natural chromated	
Sensor/band reading distance	≤2 mm	

Electrical data

Feature	Technical data	Additional information
Operating voltage	24 V DC ±20 %	reverse polarity protected
Current consumption	<100 mA	
Power input	<2 VA	
SSI clock speed input	<500 kHz	depending on the cable length
Output signals	sine, cosine	
Output voltage	1 V_{PP} (±100 mV)	
Period length of sin/cos output	5 mm	
Offset voltage	2.5 V (±100 mV)	
Interface	SSI (RS422)	
	RS485, service interface	
Cycle time	<2 ms	
Type of connection	plug connector	12-pole, 1x pin

System data

Feature	Technical data	Additional information
Resolution	10 µm	
System accuracy	±(0.1 + 0.03 x L) mm, L in m	at T_U = 20 °C
Repeat accuracy	±0.01 mm	at T_U = 20 °C
Measuring range	≤20480 mm	
Travel speed	≤5 m/s	

Ambient conditions

Feature	Technical data	Additional information
Ambient temperature	-20 ... 60 °C	
Storage temperature	-20 ... 70 °C	
Relative humidity	100 %	condensation admissible
EMC	EN 61000-6-2	interference resistance / immission
	EN 61000-6-4	emitted interference / emission
Protection category	IP65	EN 60529, mating connector mounted
Shock resistance	500 m/s², 11 ms	EN 60068-2-27
Vibration resistance	100 m/s², 5 ... 150 Hz	EN 60068-2-6

Pin assignment

- **SSI (RS422)**

Signal	PIN
SSI data	A
SSI data+	B
SSI clock	C
SSI clock+	D
+24 V DC	E
Sine	F
RS485 DÜA	G
RS485 DÜB	H
GND	J
nc	K
Zeroing input	L
Cosine	M

Hint for mounting

When mounting sensor and magnetic tape, please be careful to align both system components correctly. The arrow marks on the tape and sensor must point in the same direction when mounting the components.

A, Sensor/tape reading distance	≤2 mm
B, Lateral offset	±1 mm
C, Alignment error	±1°
D, Longitudinal tilt	±0.5°
E, Lateral tilt	±3°

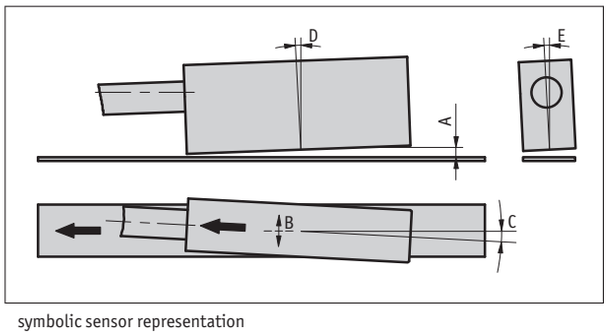

symbolic sensor representation

Order

- **Ordering information**

  one or more system components are required:

  Magnetic band MBA511 page 86

- **Order key**

  MSA511 - SSI

5.2

Scope of delivery: *MSA511, User information*

Accessories:

Cable extension KV12S0	*page 190*
Mating Connector Overview	*page 188*
Mating connector, 12-pole, socket	*Order key 76572*
Mating connector, 12-pole, angle socket	*Order key 79666*

Additional information:

Quick start, technical details	*page 50*
Product overview	*page 6*

subject to technical alteration • 2015/10/09 • 10:25 • K

Electronic display MA505
absolute, LCD dot matrix display, display accuracy 10 µm

Profile

- Display accuracy max. 10 µm
- Repeat accuracy max. ±0.01 mm
- High-contrast LCD, 12-digit LCD dot matrix
- Incremental measurement and calibration function
- Direct reference/offset value input
- Calibration input
- Works with sensor MSA
- Option: serial interface RS232/RS485
- Option: TG01 bench housing

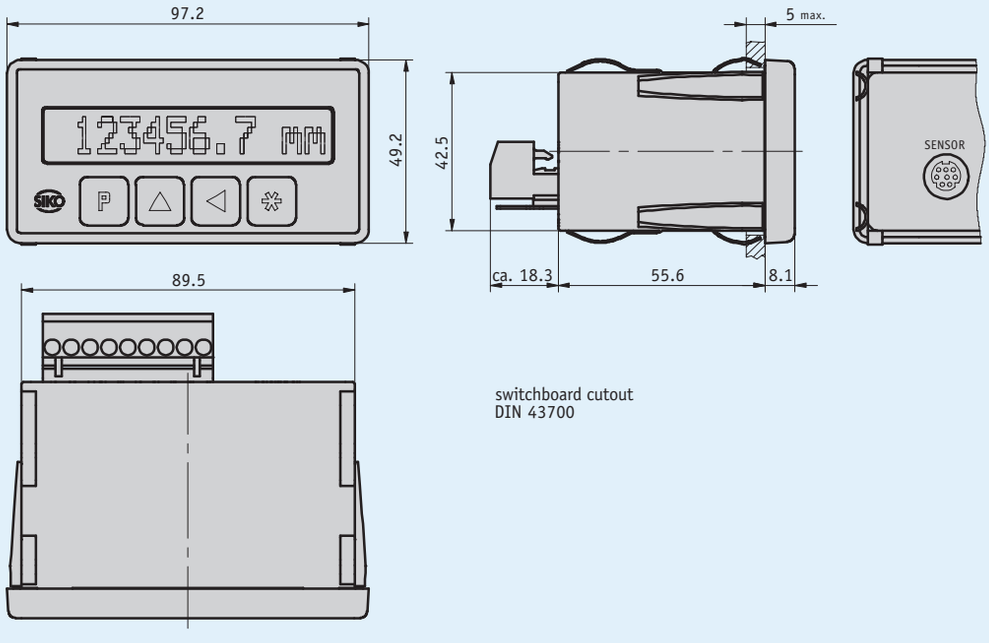

switchboard cutout
DIN 43700

Mechanical data

Feature	Technical data	Additional information
Housing design	built-in housing, plastic	switchboard cutout $92^{+0.8}$ x $45^{+0.6}$ IEC 61554

Electronic display MA505
absolute, LCD dot matrix display, display accuracy 10 µm

Electrical data

Feature	Technical data	Additional information
Operating voltage	24 V DC ±20 %	
	115 V AC ±10 %	
	230 V AC ±10 %	
Current consumption	70 mA	at 24 V DC
	20 mA	at 115 V AC
	10 mA	at 230 V AC
Display/dispaly range	12-digit, LCD dot matrix, backlit	-9999999 ... 9999999, arithmetic signs, units
Switching outputs	with or without	2x 30 V ≤100 mA
Interface	without, RS232, RS485	
Type of connection	connector	9-pole, (supply, switching output, interface/calibration input)
	mini-DIN	8-pole, 1x socket (MSA sensor)

System data

Feature	Technical data	Additional information
Resolution	0.01, 0.1, 1, 10 mm	programmable angle display
	0.001, 0.01, 0.1, 1 inch	
System accuracy	±(0.05 + 0.03 x L) mm; L in m	at T_U = 20 °C
Repeat accuracy	±0.01 mm	±1 increment
Travel speed	≤5 m/s	

5.2

Ambient conditions

Feature	Technical data	Additional information
Ambient temperature	0 ... 50 °C	
Storage temperature	-20 ... 80 °C	
Relative humidity	≤95 %	condensation inadmissible
EMC	EN 61000-6-2	interference resistance / immission
	EN 61000-6-4	emitted interference / emission
Protection category	IP40 whole device	EN 60529
	IP60 at the front with switchboard installation	EN 60529

Pin assignment

Signal	PIN
Reset	1
+24 V DC; ≤50 mA (calibration input)	2
GND	3
nc	4
RS232 (RXD), RS485 (DÜB), actor A2	5
RS232 (TXD), RS485 (DÜA), actor A1	6
PE	7
N (230/115 V AC); GND (24 V DC)	8
L (230/115 V AC); +UB (24 V DC)	9

Order

Ordering information

one or more system components are required:

Magnetic sensor MSA page 88

Ordering table

Feature	Ordering data		Specification	Additional information
Operating voltage	1	A	230 V AC	
	2		115 V AC	
	4		24 V DC	
Interface/protocol	XX/XX	B	without	
	S1/00		RS232 with standard protocol	
	S3/00		RS485 with standard protocol	
Switching output	SM	C	with	only with XX/XX interface
	S0		without	

Order key

MA505 - EG - [A] - KM - [B] - [C] - S - BS - MSA

Scope of delivery: *MA505, Mounting instructions*

Accessories:

Table-top housing TG01 *www.siko-global.com*

Additional information:

Quick start, technical details *page 50*

Product overview *page 6*

subject to technical alteration • 2015/10/09 • 10:25 • K

Electronic display MA561
absolute, LED display, display accuracy 10 µm

Profile

- Display accuracy max. 10 µm
- Repeat accuracy max. ±0.01 mm
- Incremental measurement and calibration function
- Direct reference/offset value input
- Calibration input
- Works with sensor MSA

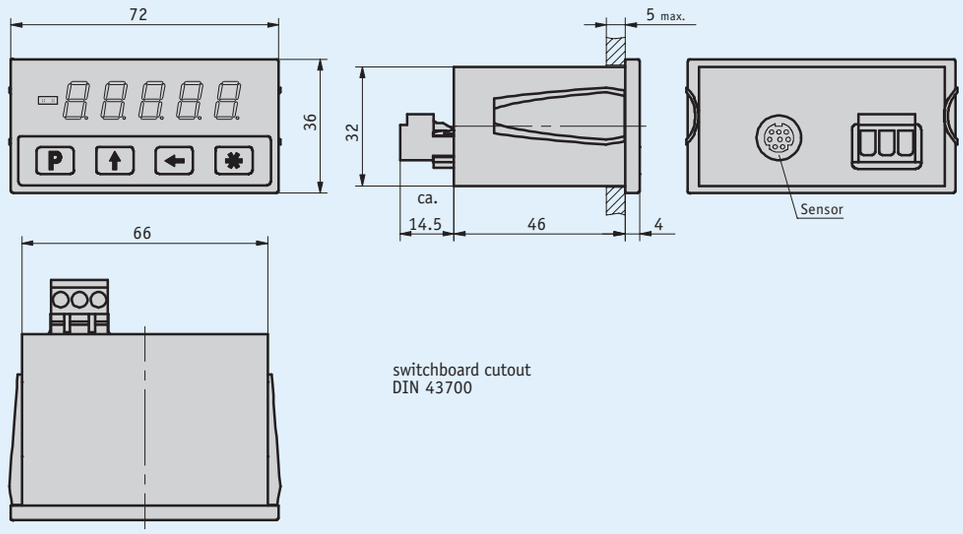

Mechanical data

Feature	Technical data	Additional information
Housing design	built-in housing, plastic (transparent red)	switchboard cutout $68^{+0.7}$ x $33^{+0.6}$ IEC 61554

Electrical data

Feature	Technical data	Additional information
Operating voltage	10 ... 30 V DC	
Current consumption	<50 mA	at 24 V DC
Display/dispaly range	5-digit, LED 7-segment, 10 mm height red	-99999 ... 99999
Type of connection	screw terminal strip	6-pole (supply)
	mini-DIN	8-pole, 1x socket (MSA sensor)

System data

Feature	Technical data	Additional information
Resolution	0.01, 0.05, 0.1, 1 mm	programmable angle display
	0.001, 0.01 inch	
System accuracy	±(0.05 + 0.03 x L) mm, L in m	
Repeat accuracy	±0.01 mm	±1 increment
Travel speed	≤5 m/s	

Ambient conditions

Feature	Technical data	Additional information
Ambient temperature	0 ... 50 °C	
Storage temperature	-20 ... 85 °C	
Relative humidity	≤95 %	condensation inadmissible
EMC	EN 61000-6-2	interference resistance / immission
	EN 61000-6-4	emitted interference / emission
Protection category	IP40 whole device	EN 60529
	IP60 at the front with switchboard installation	EN 60529

Pin assignment

Signal
CAL
+UB
GND

Order

- **Ordering information**
  one or more system components are required:
  Magnetic sensor MSA page 88

- **Order key**
  MA561 - MSA

Scope of delivery: *MA561, Mounting instructions*

Additional information:
Quick start, technical details *page 50*
Product overview *page 6*

subject to technical alteration • 2015/10/09 • 10:25 • K

Electronic display MA508/1

Quasi-absolute, mains-independent LCD display, robust metal housing

Profile

- Display accuracy max. 0.01 mm
- Repeat accuracy 0.01 mm
- Low-power LCD with integrated sensor
- Supply via integrated battery with up to 10 years of service life
- Freely programmable directly via buttons on the device

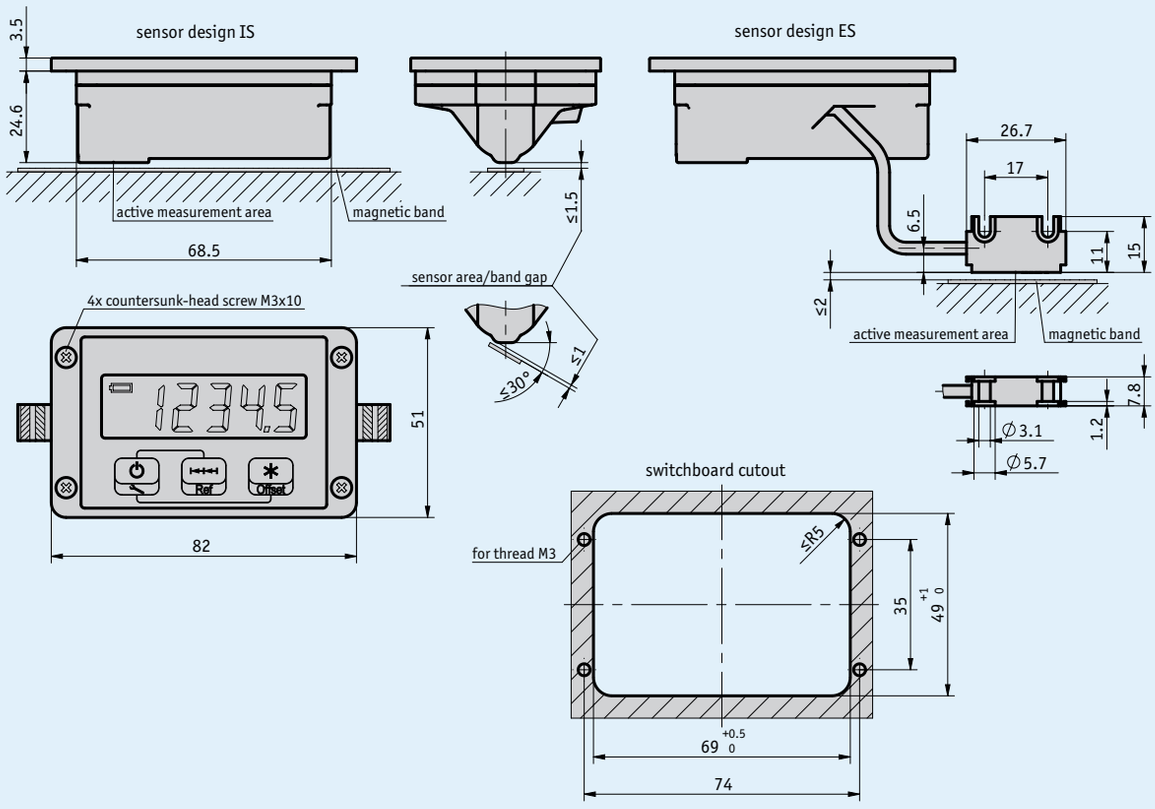

Mechanical data

Feature	Technical data	Additional information
Housing design	installation housing, zinc die-cast housing	panel opening $69^{+0.1}$ x 49^{+1}
Sensor/band reading distance	≤1.5 mm	integrated sensor
	≤2 mm	external sensor

Electrical data

Feature	Technical data	Additional information
Operating voltage	1.5 V DC	internal battery
Battery service life	~4.5 year(s) with 50 % duty cycle	at TU = 20 °C
Display/dispaly range	LCD, ~ 13 mm high	decimal until 10 µm
	-99999 ... 99999	
Keys	3 keys, membrane keyboard	
Battery monitoring	~1.5 V DC	Low-batt symbol

System data

Feature	Technical data	Additional information
Resolution	0.01, 0.05, 0.1, 1 mm	programmable angle display
	0.001, 0.01 inch	
System accuracy	±(0.05 + 0.01 x L) mm, L in m	
Repeat accuracy	±0.01 mm	±1 digit
Travel speed	≤10 m/s	

Ambient conditions

Feature	Technical data	Additional information
Ambient temperature	0 ... 60 °C	
Storage temperature	-20 ... 70 °C	
Relative humidity	≤95 %	condensation inadmissible
EMC	EN 61000-6-2	interference resistance / immision
	EN 61326-1	emitted interference / emission class B
Protection category	IP20 whole device	EN 60529
	IP60 display side	EN 60529

Hint for mounting

Sensor design	ES
A, Sensor/tape reading distance	≤2 mm
B, Lateral offset	±2 mm
C, Alignment error	±3°
D, Longitudinal inclination	±1°
E, Lateral inclination	±3°

The connection must not be changed(e.g., different cable, cable length ...)

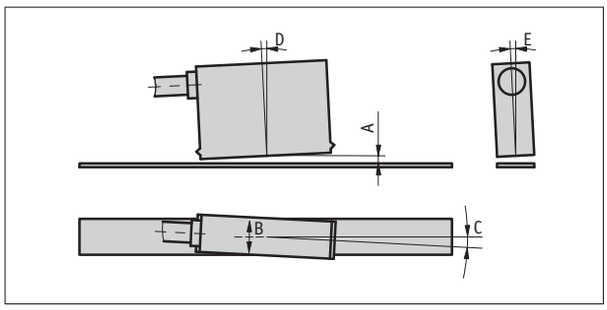

Symbolic representation

Electronic display MA508/1
Quasi-absolute, mains-independent LCD display, robust metal housing

Order

Ordering information

one or more system components are required:

Magnetic band MB500 www.siko-global.com

Ordering table

Feature	Ordering data		Specification	Additional information
Sensor design	IS	A	integrated sensor	
	ES		external sensor	
Sensor cable length	...	B	00.1 ... 01.0 m, in intervals of 0.1 m	only with ES sensor design
	...		01.5 ... 05.0 m, in intervals of 0.5 m	only with ES sensor design

Order key

MA508/1 - EG - [A] - L - [B] - SF-83083

5.2

Scope of delivery: *MA508/1, Mounting instructions*

Additional information:

Quick start, technical details *page 50*
Product overview *page 6*

subject to technical alteration • 2015/10/09 • 10:25 • K

Electronic display MA503/2

Quasi-absolute, mains-independent LCD display, display accuracy 10 µm

Profile

- Max. display accuracy 10 µm or 1/64 inch
- Repeat accuracy max. ±0.01 mm
- Low-power LCD with decimal and fraction-inch function
- Reading distance ≤2 mm
- Incremental measurement and reset function
- Direct reference/offset value input
- Battery-buffered memory
- Battery operation
- MS500H sensor pluggable

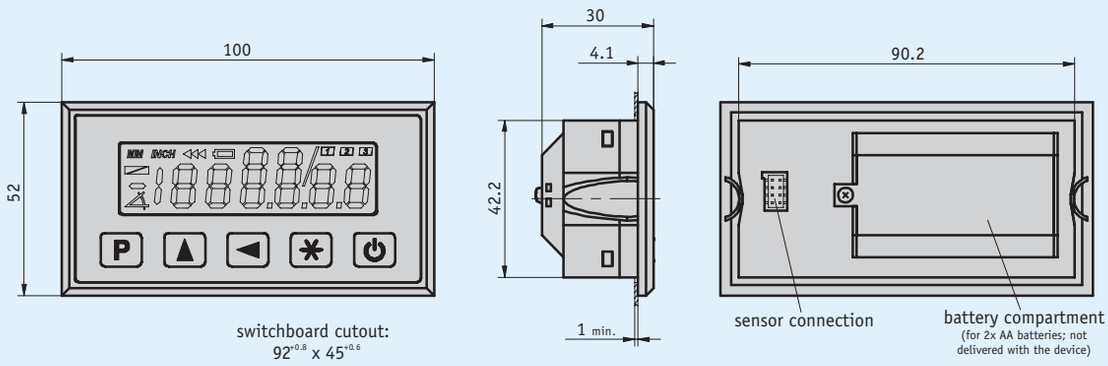

Mechanical data

Feature	Technical data	Additional information
Housing design	built-in housing, plastic	switchboard cutout $92^{+0.8}$ x $45^{+0.6}$

Electrical data

Feature	Technical data	Additional information
Operating voltage	3 V DC	reverse polarity protected
Current consumption	~220 µA	at 3 V DC
Display/dispaly range	low-power LCD, ~13 mm height	decimal to 10 µm, inch fraction to 1/64 inch
	-1999999 ... 1999999	
Battery monitoring	<1.1 V	low-batt symbol
Type of connection	integrated battery compartment	supply

System data

Feature	Technical data	Additional information
Resolution	0.01, 0.05, 0.1, 1 mm	programmable angle display
	0.001, 0.01, 1/16, 1/32, 1/64 inch	
System accuracy	±(0.1 + 0.01 x L) mm, L in m	
	±(0.05 + 0.01 x L) mm, L in m	optional
Repeat accuracy	±0.01 mm	±1 digit
Travel speed	≤5 m/s	

Electronic display MA503/2
Quasi-absolute, mains-independent LCD display, display accuracy 10 µm

Ambient conditions

Feature	Technical data	Additional information
Ambient temperature	0 ... 60 °C	
Storage temperature	-10 ... 70 °C	
Relative humidity	≤95 %	condensation inadmissible
EMC	EN 61000-6-2	interference resistance / immission
	EN 61000-6-4	emitted interference / emission
Protection category	IP40 whole device	EN 60529
	IP54 at the front	EN 60529

Order

Ordering information

one or more system components are required:

Magnetic sensor MS500H ML	page 109
Hollow shaft sensor GS04	www.siko-global.com

Order key

MA503/2 - EG - S

5.2

Scope of delivery: *MA503/2, Mounting instructions*

Accessories:

Mounting bracket ZB3005	*www.siko-global.com*

Additional information:

Quick start, technical details	*page 50*
Product overview	*page 6*

subject to technical alteration • 2015/10/09 • 10:25 • K

Profile

- Display accuracy max. 10 µm
- Repeat accuracy max. ±0.01 mm
- Lowest-power LCD
- Metric or decimal-inch indication
- Incremental measurement and reset function
- Direct reference/offset value input
- Battery-buffered memory
- Battery operation
- MS500H sensor pluggable

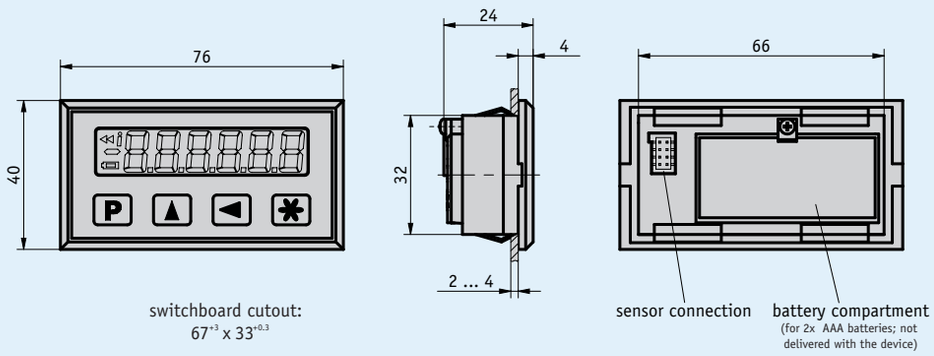

Mechanical data

Feature	Technical data	Additional information
Housing design	built-in housing, plastic	switchboard cutout 67^{+3} x $33.5^{+0.3}$

Electrical data

Feature	Technical data	Additional information
Operating voltage	3 V DC	
Current consumption	~150 µA	at 3 V DC
Display/dispaly range	low-power LCD, ~11 mm height	decimal to 10 µm
	-999999 ... 999999	
Battery monitoring	~2.4 V DC	low-batt symbol
Type of connection	integrated battery compartment	supply

System data

Feature	Technical data	Additional information
Resolution	0.01, 0.05, 0.1, 1 mm	programmable angle display
	0.001, 0.01 inch	
System accuracy	±(0.1 + 0.01 x L) mm, L in m	
	±(0.05 + 0.01 x L) mm, L in m	optional
Repeat accuracy	±0.01 mm	±1 digit
Travel speed	≤5 m/s	

Ambient conditions

Feature	Technical data	Additional information
Ambient temperature	0 ... 60 °C	
Storage temperature	-10 ... 70 °C	
Relative humidity	≤95 %	condensation inadmissible
EMC	EN 61000-6-2	interference resistance / immission
	EN 61000-6-4	emitted interference / emission
Protection category	IP40 whole device	EN 60529
	IP54 at the front	EN 60529

Order

Ordering information

one or more system components are required:

Magnetic sensor MS500H ML	page 109
Hollow shaft sensor GS04	www.siko-global.com

Order key

MA504/1 - EG - S - SF-85792

5.2

Scope of delivery: *MA504/1, Mounting instructions*

Accessories:

Mounting bracket ZB3004	*www.siko-global.com*

Additional information:

Quick start, technical details	*page 50*
Product overview	*page 6*

subject to technical alteration • 2015/10/09 • 10:25 • K

Profile

- Compact design of sensor and connector
- To be connected to MA503/2 or MA504/1
- Works with magnetic tape MB500/1, MR500, MBR500
- Reading distance ≤2 mm

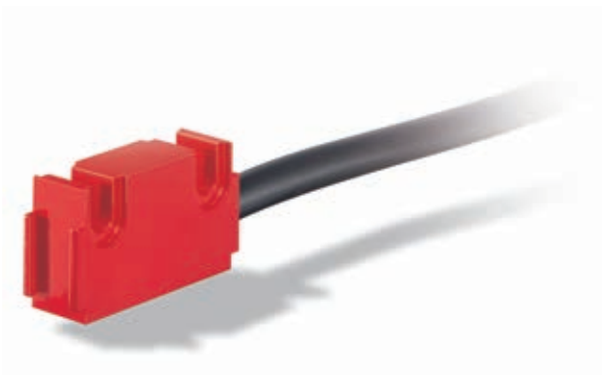

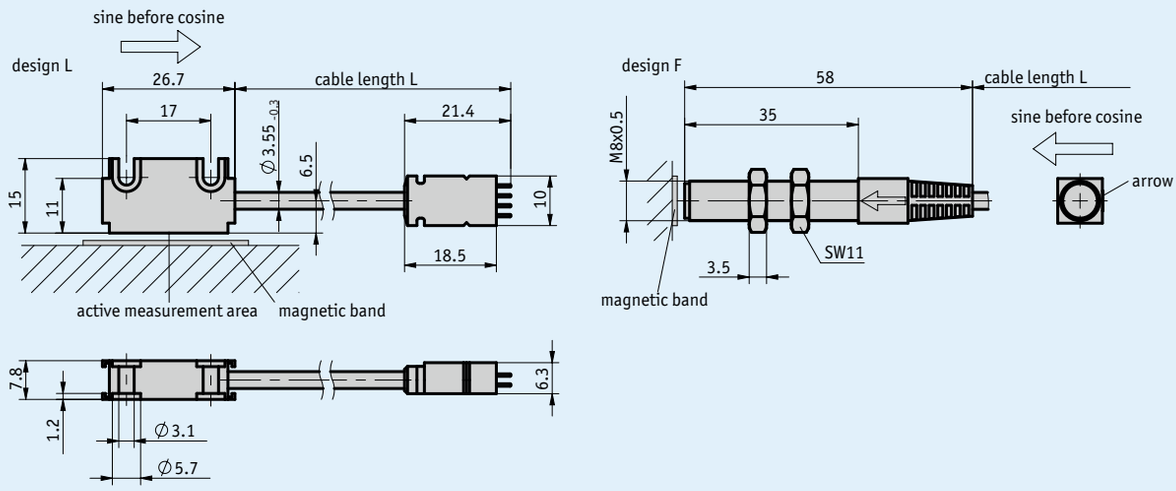

Mechanical data

Feature	Technical data	Additional information
Housing	aluminum red	L design
	steel	F design
Sensor/band reading distance	0.1 ... 2 mm	
Cable sheath	PVC	6-wire ø3.55$_{-0.3}$ mm (E16 type of connection)
Cable bending radius	>17 mm (static)	Anschlussart E16

Electrical data

Feature	Technical data	Additional information
Operating voltage	supply via measurement display / downstream electronic unit	
Current consumption	supply via measurement display / downstream electronic unit	
Type of connection	flat connector	8-pole, 1x pin (E16)

Magnetic sensor MS500H ML
Passive sensor, miniature design

System data

Feature	Technical data	Additional information
System accuracy	depending on downstream electronic unit	
Repeat accuracy	depending on downstream electronic unit	
Travel speed	depending on downstream electronic unit	

Ambient conditions

Feature	Technical data	Additional information
Ambient temperature	0 ... 60 °C	
Storage temperature	-20 ... 70 °C	
Relative humidity	100 %	Betauung zulässig (Sensorkopf)
Protection category	IP67	EN 60529 (Sensorkopf)
Shock resistance	2000 m/s², 11 ms	EN 60068-2-27
Vibration resistance	200 m/s², 50 Hz ... 2 kHz	EN 60068-2-6

Hint for mounting

A, Sensor/tape reading distance	≤2 mm
B, Lateral offset	±2 mm
C, Alignment error	±3°
D, Longitudinal inclination	±1°
E, Lateral inclination	±3°

The length of the cable between the sensor and connector cannot be subsequently increased or decreased.

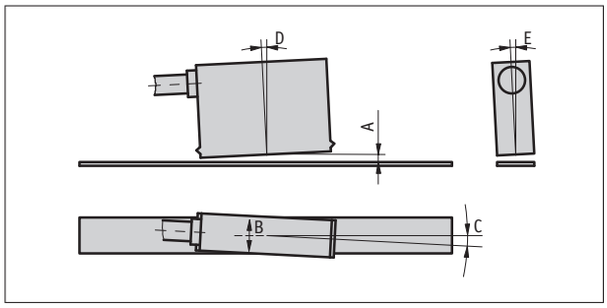

Symbolic representation

Order

Ordering information

one or more system components are required:

Magnetic band MB500/1	page 58
Magnetic ring MR500	page 152
Magnetic band ring MBR500	page 162

Ordering table

Feature	Ordering data		Specification	Additional information
Design	L	A	rectangular	
	F		round	
Cable length	...	B	00.2 ... 10.0 m	

Order key

MS500H ML - [A] - E16 - [B]

Scope of delivery: *MS500H ML, Mounting instructions, Fastening set*

Additional information:

Quick start, technical details *page 50*
Product overview *page 6*

subject to technical alteration • 2015/10/09 • 10:25 • K

Profile

- Display accuracy max. 10 µm or 1/64 inch
- Repeat accuracy max. ±0.01 mm
- Low-power LCD with decimal and fraction-inch function
- Reading distance ≤2 mm
- Battery-buffered memory
- Battery operation
- Works with receiver module RTX500

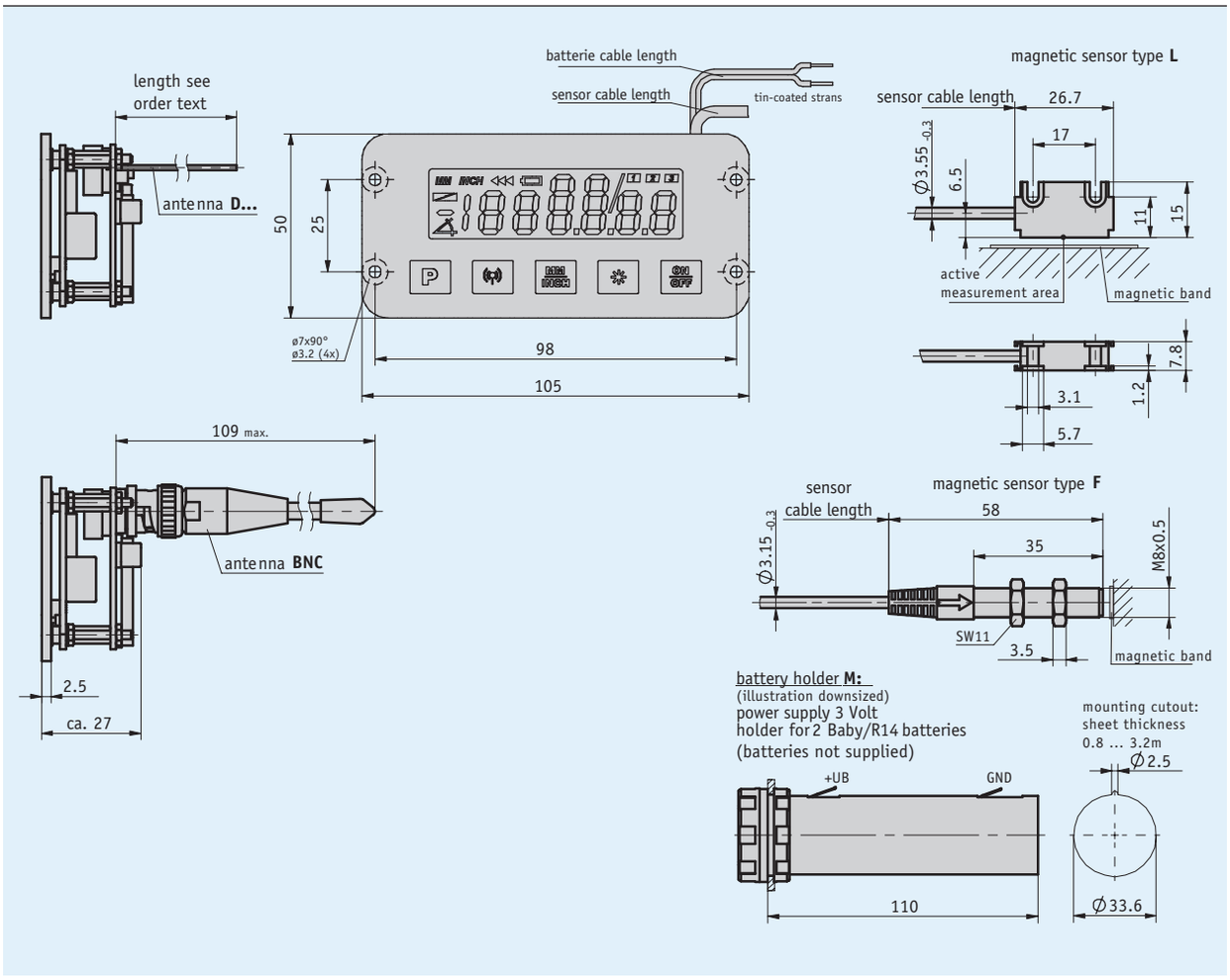

Mechanical data

Feature	Technical data	Additional information
Housing design	installation kit	
Sensor/band reading distance	≤2 mm	

Electronic display MA503WL
quasi-absolute, mains-independent LCD display, radio transmission to RTX500

Electrical data

Feature	Technical data	Additional information
Operating voltage	2 ... 3.5 V DC	
Current consumption	≤600 µA	at 3 V DC; display mode
	27 ... 55 mA	at 3 V DC; send mode
Display/dispaly range	-999999 ... 999999	
Interface	RS232, RS485	see RTX500 receiver side
Radio frequency	868 ... 870 MHz	
	902 ... 928 MHz	USA
Type of connection	strand led outwards	supply, external battery holder

System data

Feature	Technical data	Additional information
Resolution	0.01, 0.05, 0.1, 1 mm	
	0.001, 0.01, 1/16, 1/32, 1/64 inch	
System accuracy	±(0.1 + 0.01 x L) mm; L in m	
Repeat accuracy	±0.01 mm	±1 digit
Travel speed	≤5 m/s	

Ambient conditions

Feature	Technical data	Additional information
Ambient temperature	0 ... 60 °C	
Storage temperature	-20 ... 70 °C	
Relative humidity	≤95 %	condensation inadmissible
EMC	EN 61000-6-2	interference resistance / immission
	EN 61000-6-4	emitted interference / emission
Protection category	IP40 display	EN 60529
	IP67 sensor	EN 60529

Pin assignment

Signal	Cable color
GND	black
+UB	red

Hint for mounting

A, Sensor/tape reading distance	≤2 mm
B, Lateral offset	±2 mm
C, Alignment error	±3°
D, Longitudinal inclination	±1°
E, Lateral inclination	±3°

The length of the cable between the sensor and connector cannot be subsequently increased or decreased.

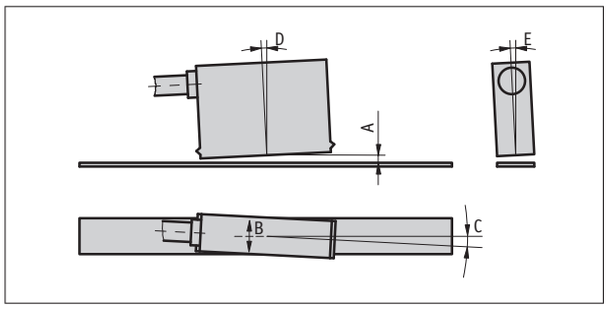

Symbolic representation

Order

Ordering information

one or more system components are required:

Radio transmitter/receiver RTX500	page 114
Magnetic band MB500/1	page 58

Ordering table

Feature	Ordering data		Specification	Additional information
Magnetic sensor	L	A	L design	
	F		F design	
Sensor cable length	...	B	0.2 ... 2.0 m, in intervals of 0.1 m	
Battery cable length	...	C	0.3 ... 2.0 m, in intervals of 0.1 m	
Operating mode	TX	D	Send	
	RX		Receive	
Software	S	E		
	SW05		bidirectional communication	
Battery holder	M	F	with	
	0		without	
Antenna	BNC	G		
	D82		wire length 82 mm	radio frequency 915
	D86		wire length 86 mm	radio frequency 869
	D120		wire length 120 mm	radio frequency 869 + 915
Radio frequency	869	H	869 MHz	worldwide except USA
	915		915 MHz	USA

Order key

MA503WL - ES - [A] - [B] - [C] - L - [D] - [E] - SF-83606 - [F] - [G] - [H]

Scope of delivery: *MA503WL, Mounting instructions, Sensor fastening set*

Additional information:

Quick start, technical details *page 50*
Product overview *page 6*

subject to technical alteration • 2015/10/09 • 10:25 • K

Radio transmitter/receiver RTX500
Interface, send/receive module for MA503WL

Profile

- Works with radio-based magnetic display MA503WL
- Mounting on top-hat rail or as an installation kit
- Pluggable BNC antenna
- 24 V DC supply
- RS232 or RS485 interface with ASCII-protocol

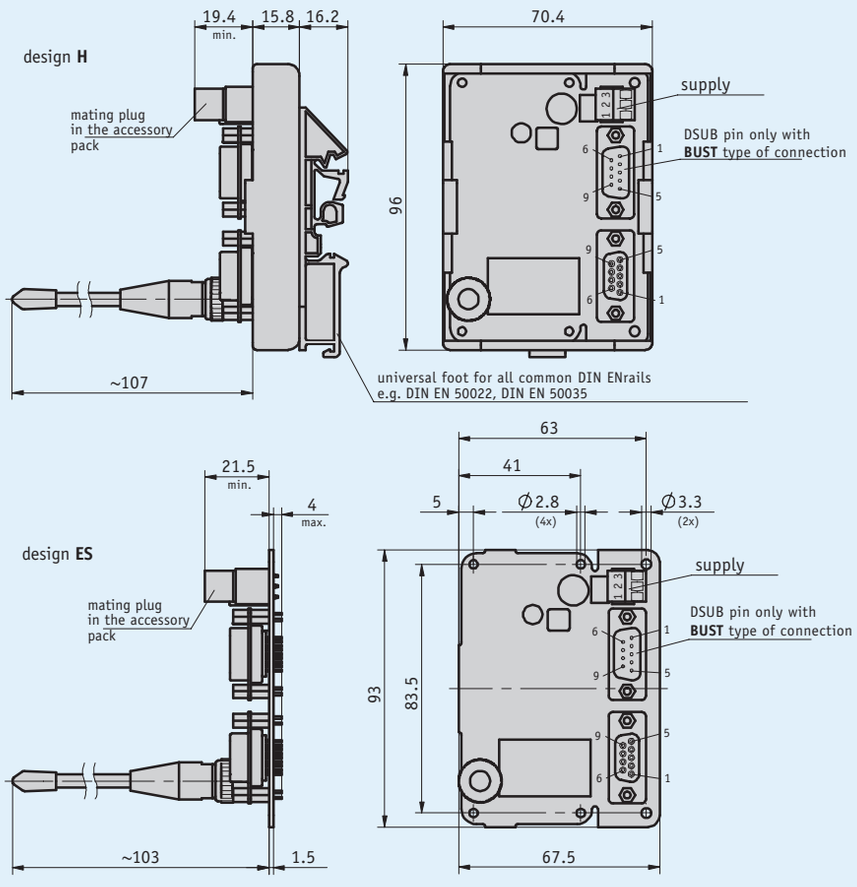

Mechanical data

Feature	Technical data	Additional information
Housing	plastic	snap modue for top hat rail mounting

Electrical data

Feature	Technical data	Additional information
Operating voltage	24 V DC ±20 %	
Power input	<1 VA	
Receive sensitivity	-111 dBm	
Interface	RS232, RS485	
Radio frequency	868 ... 870 MHz	
	902 ... 928 MHz	USA
Type of connection	screw terminal	3-pole (supply)
	D-Sub	9-pole (signal output)

Ambient conditions

Feature	Technical data	Additional information
Ambient temperature	0 ... 60 °C	
Storage temperature	-20 ... 70 °C	
Relative humidity	<95 %	condensation inadmissible
EMC	EN 61000-6-2	interference resistance / immission
	EN 61000-6-4	emitted interference / emission
Protection category	IP40	

Pin assignment

Supply

Signal	PIN
+UB	1
GND	2
PE	3

RS232, 9-pole D-SUB

Signal	PIN
nc	1
TXD	2
RXD	3
nc	4
GND	5
nc	6
nc	7
nc	8
nc	9

RS485, 9-pole D-SUB

Signal	PIN
DÜB (D-)	1
nc	2
nc	3
DÜA (D+)	4
GND	5
nc	6
nc	7
nc	8
nc	9

5.2

Order

Ordering table

Feature	Ordering data		Specification	Additional information
Design	H	A	DIN rail mounting	
	ES		installation kit	
Type of connection	BU	B	9 poles, D-Sub socket	
	BUST		2 x 9 poles, D-Sub socket + pin	
Operating mode	TX	C	Send	
	RX		Receive	
Interface	RS232	D	RS232	
	RS485		RS485	
Software	S	E	Standard	
	SW03		bidirectional communication	
Radio frequency	869	F	869 MHz	
	915		915 MHz	USA

Order key

RTX500 - [A] - [B] - [C] - [D] - [E] - BNC - [F]

5.2

Scope of delivery: *RTX500, Mounting instructions*

Additional information:

Quick start, technical details *page 50*
Product overview *page 6*

subject to technical alteration • 2015/10/09 • 10:25 • K

Profile

- Measurement lengths up to 2000 mm
- Resolution of 0.1 mm
- Maintenance-free backup battery
- Long battery life
- Easy mounting
- Compact design

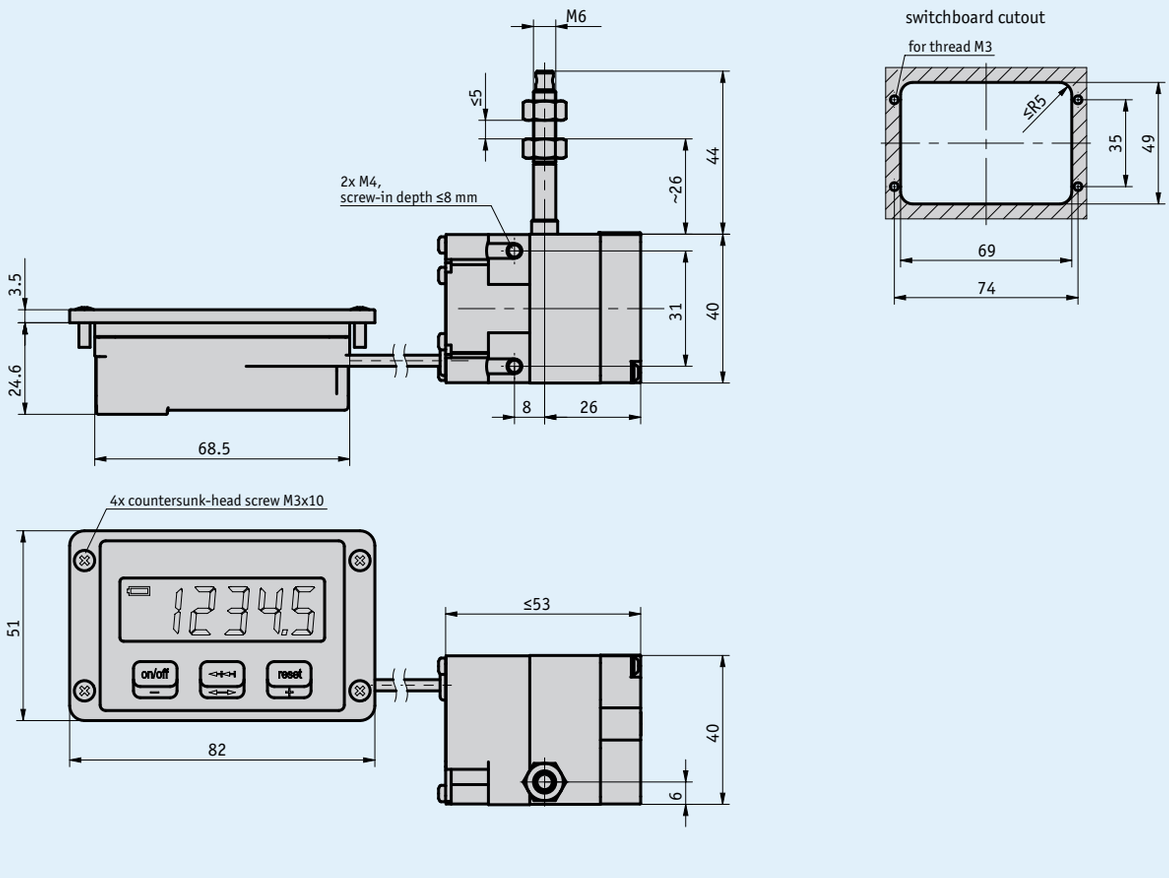

Mechanical data

Feature	Technical data	Additional information
Housing	reinforced plastic	wire-actuated encoder
Housing design	Built-in housing, zinc die-cast	measurement display
Wire design	steel wire (stainless steel) ø0.45 mm	plastic coated
Extension force	≥2 N	
Cable length	≤2 m	

Electrical data

Feature	Technical data	Additional information
Battery service life	<10 year(s) bei 20 % duty cycle	at T_U = 20 °C
	~9 year(s) at 40% duty cycle	at T_U = 20 °C
	~6 year(s) at 100% duty cycle	at T_U = 20 °C
Display/dispaly range	5-digit, LCD 7-segment, ~13 mm height	-99999 ... 99999
Keys	3 keys, membrane keyboard	
Interface		for the PTM programming tool

System data

Feature	Technical data	Additional information
Resolution	0.1 mm	
Repeat accuracy	±0.15 mm	
Measuring range	2000 mm	
Travel speed	≤800 mm/s	

Ambient conditions

Feature	Technical data	Additional information
Ambient temperature	0 ... 60 °C	measurement display
	-10 ... 80 °C	wire-actuated encoder
Storage temperature	-20 ... 70 °C	
Relative humidity	≤95 %	condensation inadmissible
EMC	EN 61000-6-2	interference resistance / immission
	EN 61000-6-4	emitted interference / emission
Protection category	IP20	EN 60529 (wire-actuated encoder)
	IP60 display side	EN 60529 (wire-actuated encoder)
	IP50	EN 60529 (wire-actuated encoder)
	IP65	EN 60529 (wire-actuated encoder)

5.2

Hint for mounting

When securing the wire it must be ensured that the wire is straight and vertical in relation to the wire outlet.
Recommendation: Only select the starting position after an unwound length of approx. 5 mm. This prevents the wire hitting the end stop when it is rewound.

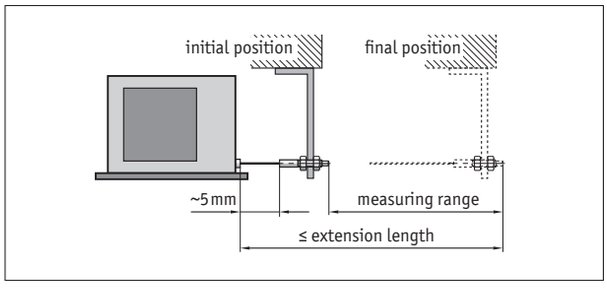

symbolic depiction

Order

Ordering table

Feature	Ordering data		Specification	Additional information
Cable length	01.0	A	1 m	
	02.0		2 m	
Type of protection of the wire-actuated encoder	IP50	B	IP50	
	IP65		IP65	

Order key

MA508SG - [A] - [B]

Scope of delivery: *MA508SG, Mounting instructions*

Additional information:

Quick start, technical details *page 50*
Product overview *page 6*

subject to technical alteration • 2015/10/09 • 10:25 • K

Translation module ASA510H

Quasi-absolute, battery-buffered translation module

Profile

- Max. resolution 1 µm (LD)
- Repeat accuracy ±0.005 mm
- SSI or RS485 interface
- Scale MB500/1
- Reading distance ≤2 mm
- Compact, absolutely measuring unit with hard-wired sensor
- Max. measuring length ±655 m (RS485)
- Maintenance-free backup battery
- Option: digital LD interface
- Option: analog 1 V_{SS} or 2.2 V_{SS} interfaces (5 mm period length)

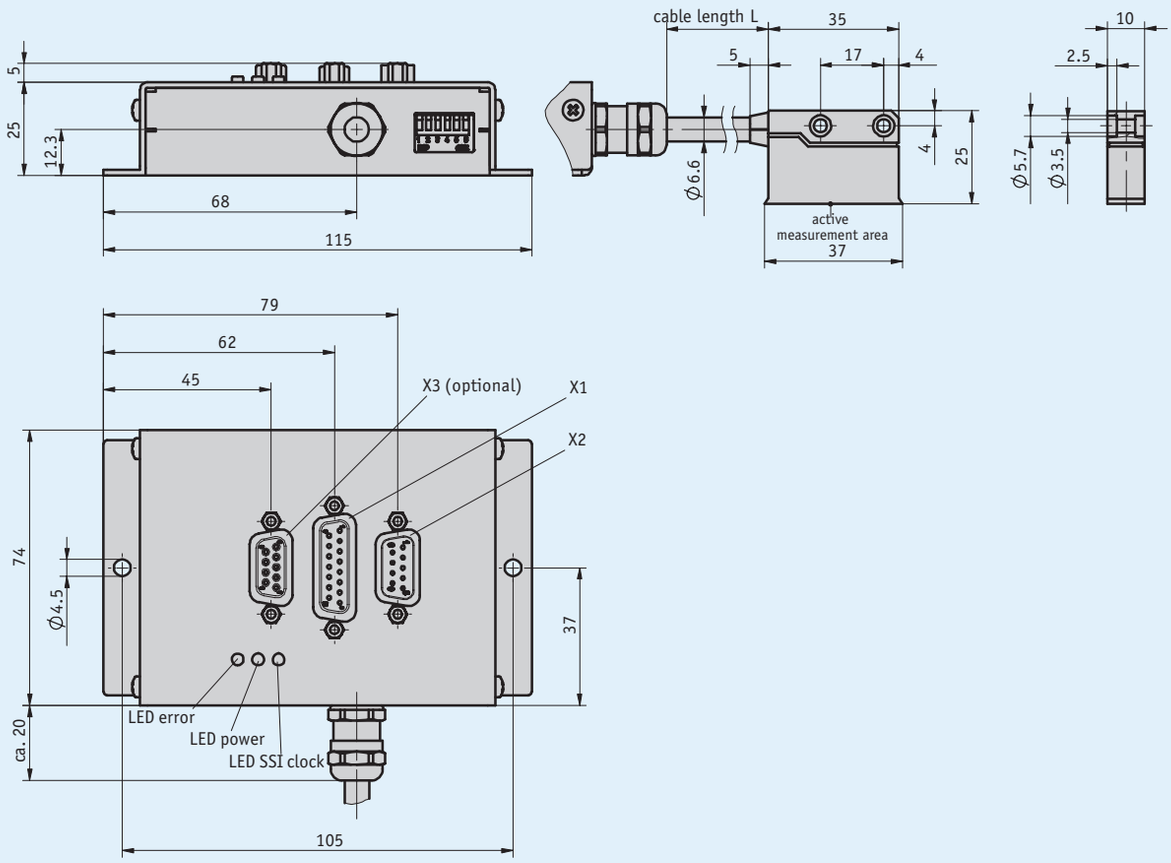

Mechanical data

Feature	Technical data	Additional information
Housing	steel sheet	electrogalvanized
	zinc die-cast	sensor
Cable length	≤6 m	
Cable sheath	PVC suitable for drag-chain use	≥1.000.000 with bending radius = 8x cable diameter and 20 °C

Travel speed

		Travel speed Vmax [m/s]				
Resolution [µm]	**1**	4.00	1.60	0.72	0.32	0.12
	5	8.00	8.00	3.60	1.60	0.62
	10	8.00	8.00	7.20	3.20	1.25
	12.5	8.00	8.00	8.00	4.00	1.60
Pulse interval [µs]		0.2	0.5	1.1	2.5	6.3
Counting frequency [kHz]		1250.00	500.00	230.00	100.00	40.00

L'électronique interne d'évaluation est capable de générer des impulsions de comptage dont la longueur est limitée par l'intervalle d'impulsions. L'électronique en aval doit être réglée en conséquence. Le cas échéant, sélectionner d'abord l 'intervalle d'i

Electrical data

Feature	Technical data	Additional information
Operating voltage	24 V DC ±20 %	reverse polarity protected
Current consumption	<150 mA	
Battery service life	10 year(s)	at T_U = 20 °C, according to manufacturer specification

5.2

System data

Feature	Technical data	Additional information
Resolution	5 µm or 10 µm	SSI, selectable via DIP switch
	≤1 µm	LD
	5 mm period length	1Vss
System accuracy	±(0.025 + 0.01 x L) mm, L in m	at T_U = 20 °C (L = length per meter or part thereof)
Repeat accuracy	±1 increment(s)	(5 µm / 10 µm)
Measuring range	±655000 mm	
Travel speed	5 m/s	SSI absolute value
	8 m/s	

Ambient conditions

Feature	Technical data	Additional information
Ambient temperature	0 ... 60 °C	
Storage temperature	-20 ... 70 °C	
Relative humidity	≤95 %	translation module, condensation inadmissible
	≤100 %	sensor, condensation admissible
EMC	EN 61000-6-2	interference resistance / immission
	EN 61000-6-4	emitted interference / emission
Protection category	IP20	EN 60529 (translation module)
	IP67	EN 60529 (sensor)

Pin assignment

Connector X1

SSI	PIN
nc	1
nc	2
+24 V DC	3
0 V	4
nc	5
nc	6
SSI_DATA	7
/SSI_DATA	8
nc	9
nc	10
nc	11
SSI_GND	12
nc	13
SSI_CLK	14
/SSI_CLK	15

Connector X2

RS485	RS485 + LD	PIN
nc	A	1
nc	B	2
nc	nc	3
+24 V DC	+24 V DC	4
0 V	0 V	5
nc	/A	6
nc	/B	7
DÜA	DÜA	8
DÜB	DÜB	9

Connector X3

1 V_{SS}	PIN
sin	1
/sin	2
cos	3
nc	4
nc	5
nc	6
ANA_GND	7
/cos	8
nc	9

5.2

Hint for mounting

A, Sensor/tape reading distance	≤2 mm
B, Lateral offset	±1 mm
C, Alignment error	±3°
D, Longitudinal inclination	±2°
E, Lateral inclination	±2°

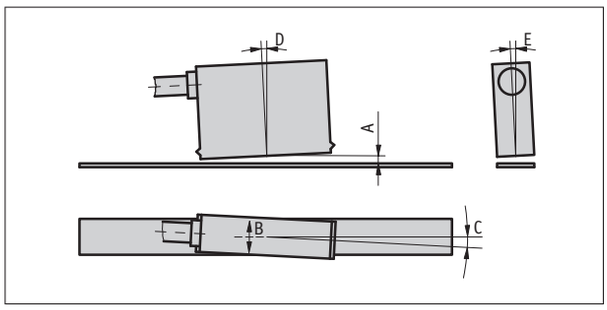

Symbolic representation

Order

Ordering information

one or more system components are required:

Magnetic band MB500/1 page 58

Ordering table

Feature	Ordering data		Specification	Additional information
Cable length	...	A	01.0 ... 06.0 m, in intervals of 1 m	
Digital interface	LD	B	Line Driver (RS422)	
	0		without	
Digital resolution	...	C	1, 10, 12.5, 5 in µm	
Pulse interval	...	D	0.2, 0.5, 1.1, 2.5, 6.3 in µs	
Analog interface	1Vss	E	1 V_{SS}	
	2.2Vss		2.2 V_{SS}	
	0		without	

Order key

ASA510H - AM - [A] - [B] - [C] - [D] - [E] - S

5.2

Scope of delivery: ASA510H, User information, grounding material, Sensor fastening set

Accessories:

Mating Connector Overview	*page 188*
Mating connector, X3, 9-pole, pin+shell	*Order key 71364+71365*
Mating connector, X2, 9-pole, socket+shell	*Order key 71366+71365*
Mating connector, X1, 15-pole, socket+shell	*Order key 73947+73946*

Additional information:

Quick start, technical details	*page 50*
Product overview	*page 6*

subject to technical alteration • 2015/10/09 • 10:25 • K

5.3

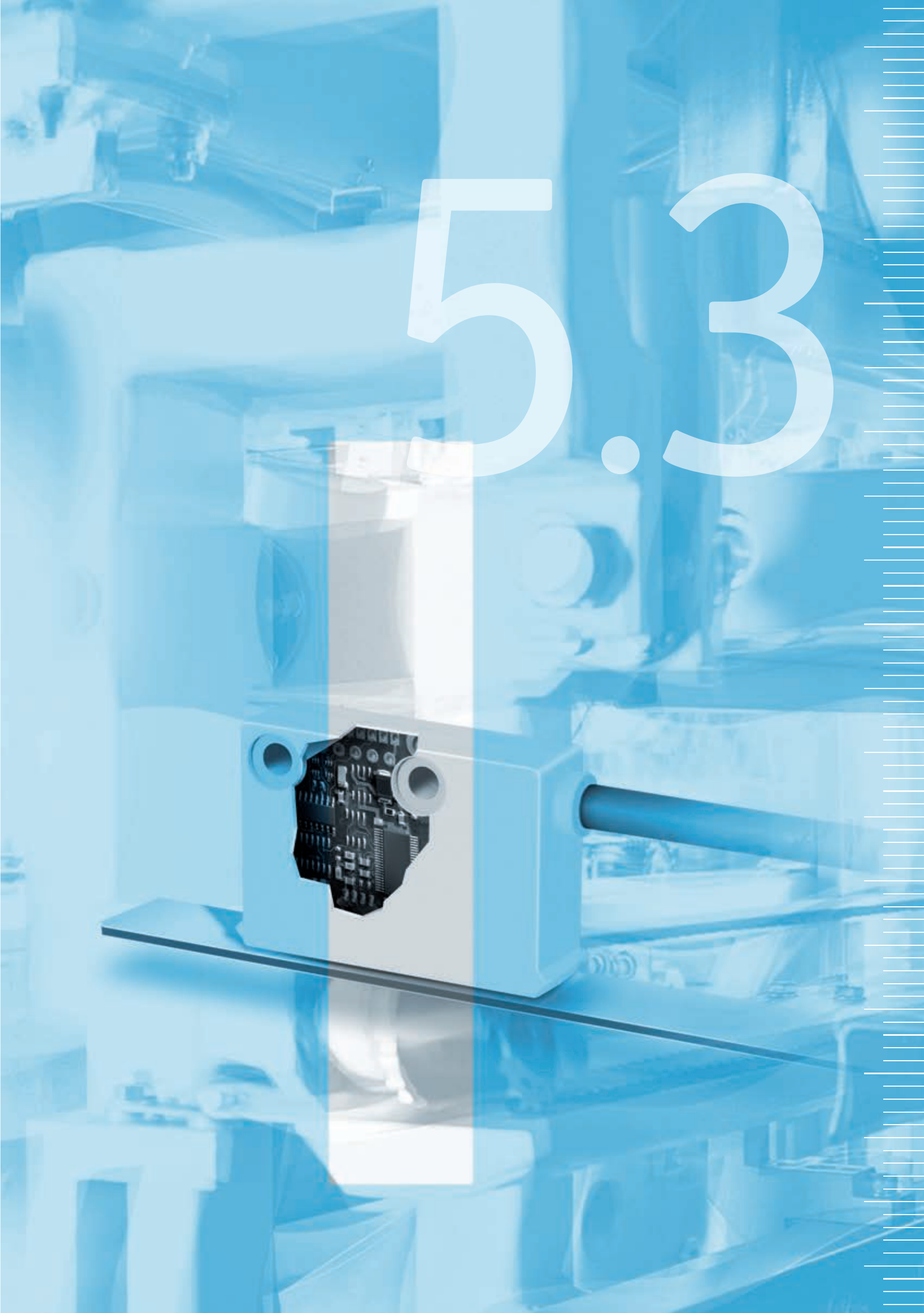

5.0 | Overview 3

5.1 | MagLine Micro 15

5.2 | MagLine Basic 49

5.3 | MagLine Macro

Quick start, technical details		126
Product matrix		127
Products	MB400	128
	MB2000	130
	MB4000	132
	MSK400/1	134
	MSK2000	137
	MSK4000	140

5.4 | MagLine Roto 145

5.5 | Accessories 183

5.6 | Appendix 195

5.7 | Product index, contact information 203

Introduction

Designed for long measuring paths, the system measures distances of 100 metres and more. Digital signal outputs forward the measured values via the known interfaces with a resolution of 0.25 mm and an accuracy of up to 1 mm to displays or higher-level control units. With its high level of reliability, also in a very rough environment, the main applications of MagLine Macro are in the storage and transport technology sector.

- Incrementally measuring systems
- Resolutions up to 0.25 mm
- Repeat and absolute accuracies up to 1 mm

System access

MagLine Macro offers different options for measured value recording. A direct product comparison is possible with the matrix opposite. Macro measuring systems comprise the two individual components sensor and magnetic strip. The available sensors support signal evaluation via digital outputs (square wave signals).

Particular emphasis is placed on free and flexible integration into new and existing systems. Matching single components can be individually assembled and therefore optimally adapted to the existing measurement conditions. The values measured with non-contacting systems are generally processed further by downstream electronic systems or higher-level control units. We would be pleased to place our know-how at your disposal for the design of a robust and fail-safe measurement system for large measuring distances. Contact us!

Magnetic bands
Theoretically infinite measurement length (incremental)
Accuracy class up to 1 mm

Sensors
For direct connection to downstream electronics (e.g., PLC)
Max. tolerance of reading distance to scale 20 mm
Incremental und absolute interfaces

5.3

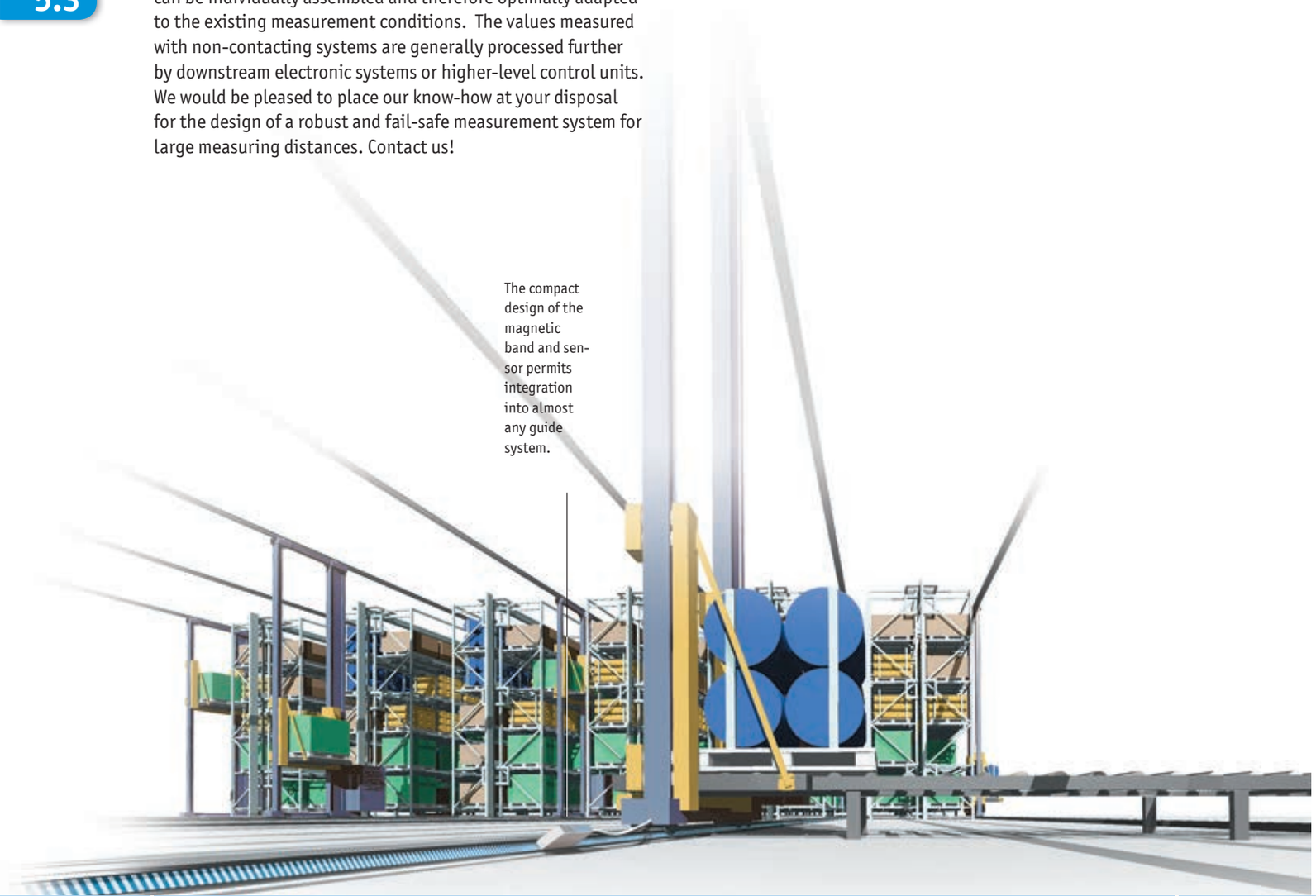

The compact design of the magnetic band and sensor permits integration into almost any guide system.

MagLine Macro

	Incremental systems		
Signal analysis via	**Output, digital**		
System accuracy class [mm]	±1	±1	±2
Maximum repeat accuracy [mm]	±1	±0.25	±0.5
Maximum measurement length/magnetic display	infinite	infinite	infinite
Maximum reading distance [mm]	4.0	10.0	20.0

Resolution max. in mm	**Supply voltage**	**Output/ interface**	**Magnetic sensor**	**Page**			
1	24 V DC	PP	**MSK400/1**	**134**			
0.25	24 V DC 5 V DC	PP, LD	**MSK2000**	**137**			
0.25	24 V DC 5 V DC	PP, LD, TTL	**MSK4000**	**140**			

Width in mm	**Available length** max. in m/piece		**Magnetic band**				
5 oder 10	100		**MB400**	**128**			
10 oder 20	100		**MB2000**	**130**			
20	100		**MB4000**	**132**			

5.3

Magnetic band MB400
Incrementally coded scale, 4 mm pole length

Profile

- Easy adhesive mounting, self-assembly possible
- Reels up to 100 m available

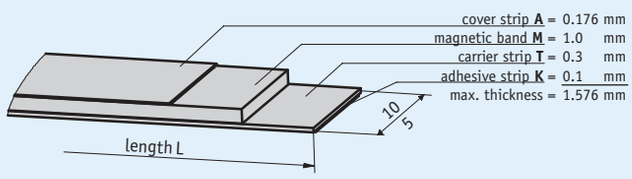

5.3

Mechanical data

Feature	Technical data	Additional information
Material	stainless steel	cover strip
Band width	10 mm or 5 mm	
Band thickness	1.4 mm	without cover strip
Mounting type	adhesive connection	double-sided tape premounted

System data

Feature	Technical data	Additional information
Pole length	4 mm	
Measuring range	∞	

Ambient conditions

Feature	Technical data	Additional information
Ambient temperature	-20 ... 70 °C	
Storage temperature	-40 ... 70 °C	
Expansion coefficient	(11 ±1) x 10^{-6}/K	spring steel
	(16 ±1) x 10^{-6}/K	stainless steel
Relative humidity	100 %	condensation admissible

Order

Ordering information

The necessary tape length is calculated from:
Measured distance + sensor length "S" + (2 x forerun or overrun "B", resp.).

S	see the drawing of the sensor used
B	50 mm (forerun and overrun)

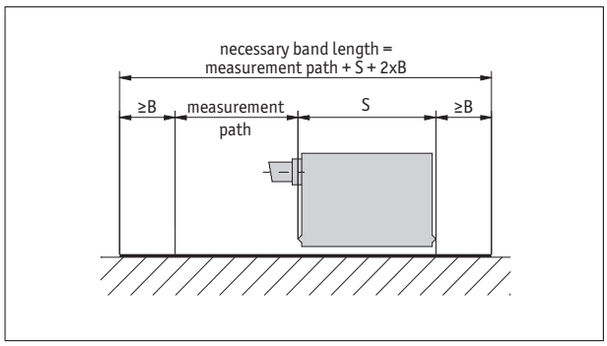

Symbolic representation

Ordering table

Feature	Ordering data		Specification	Additional information
tapewidth	10	A	in mm	
	5		in mm	
Material carrier tape	St	B	steel	
	VA		stainless steel	
Length	...	C	00.10 ... 100.0 m, in intervals of 0.1 m	ordering detail, see "Ordering information"
Adhesive carrier tape	TM	D	with	
	TO		without	
Cover strip	AM	E	with	
	AO		without	

Order key

MB400 - [A] - [B] - [C] - [D] - [E]

Scope of delivery: *MB400*

Accessories:

Profile Rail PS *page 185*
Protective band SB *page 186*
Profile Rail PS1 *page 184*

Additional information:

Quick start, technical details *page 126*
Product overview *page 6*

subject to technical alteration • 2015/10/09 • 10:25 • K

Magnetic band MB2000
Incrementally coded scale, pole length 20 mm

Profile

- Easy adhesive mounting, self-assembly possible
- Reels up to 100 m available

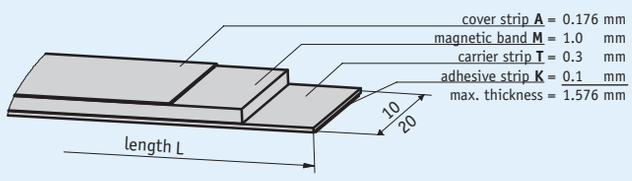

5.3

Mechanical data

Feature	Technical data	Additional information
Material	stainless steel	cover strip
Band width	10 mm or 20 mm	
Band thickness	1.4 mm	without cover strip
Mounting type	adhesive connection	double-sided tape premounted

System data

Feature	Technical data	Additional information
Pole length	20 mm	
Measuring range	∞	

Ambient conditions

Feature	Technical data	Additional information
Ambient temperature	-20 ... 70 °C	
Storage temperature	-40 ... 70 °C	
Expansion coefficient	(11 ±1) x 10^{-6}/K	spring steel
	(16 ±1) x 10^{-6}/K	stainless steel
Relative humidity	100 %	condensation admissible

Order

Ordering information

The necessary tape length is calculated from:
Measured distance + sensor length "S" + (2 x forerun or overrun "B", resp.).

S	see the drawing of the sensor used
B	50 mm (forerun and overrun)

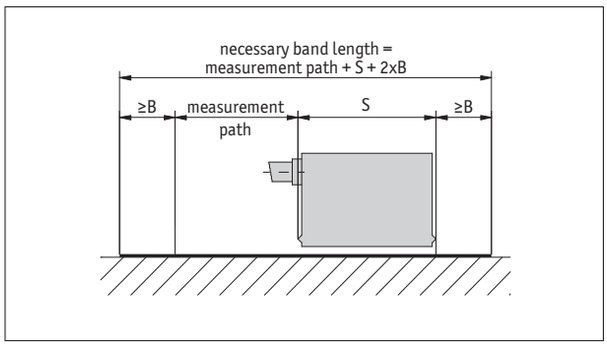

Symbolic representation

Ordering table

Feature	Ordering data		Specification	Additional information
tapewidth	10	A	in mm	
	20		in mm	
Material carrier tape	St	B	steel	
	VA		stainless steel	
Length	...	C	00.10 ... 100.0 m, in intervals of 0.1 m	ordering detail, see "Ordering information"
Adhesive carrier tape	TM	D	with	
	TO		without	
Cover strip	AM	E	with	
	AO		without	

Order key

MB2000 - [A] - [B] - [C] - [D] - [E]

Scope of delivery: *MB2000*

Accessories:

Profile Rail PS *page 185*
Protective band SB *page 186*
Profile Rail PS1 *page 184*

Additional information:

Quick start, technical details *page 126*
Product overview *page 6*

subject to technical alteration • 2015/10/09 • 10:25 • K

Magnetic band MB4000
Incrementally coded scale, pole length 40 mm

Profile

- Easy adhesive mounting, self-assembly possible
- Without carrier strip

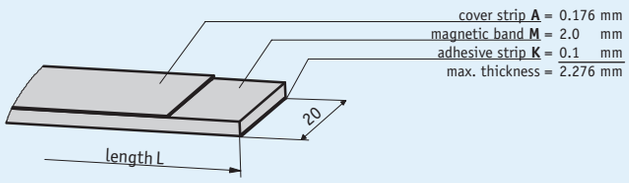

5.3

Mechanical data

Feature	Technical data	Additional information
Material	stainless steel	cover strip
Band width	20 mm	
Band thickness	2 mm	without cover strip or adhesive tape
Mounting type	adhesive connection	double-sided tape premounted

System data

Feature	Technical data	Additional information
Pole length	40 mm	
Measuring range	∞	

Ambient conditions

Feature	Technical data	Additional information
Ambient temperature	-20 ... 70 °C	
Storage temperature	-40 ... 70 °C	
Relative humidity	100 %	condensation admissible

Order

Ordering information

The necessary tape length is calculated from:
Measured distance + sensor length "S" + (2 x forerun or overrun "B", resp.).

S	see the drawing of the sensor used
B	100 mm (forerun and overrun)

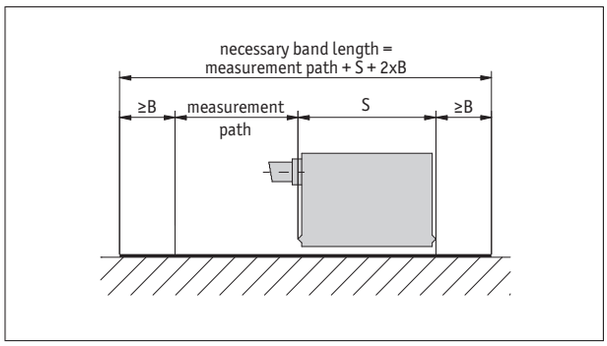

Symbolic representation

Ordering table

Feature	Ordering data		Specification	Additional information
Length	...	A	**00.10 ... 100.0** m, in intervals of 0.1 m	ordering detail, see "Ordering information"
Adhesive carrier tape	TM	B	with	
	TO		without	
Cover strip	AO	C	without	
	AM		with	

Order key

MB4000 - 20 - [A] - [B] - [C]

Scope of delivery: *MB4000*

Additional information:

Quick start, technical details *page 126*
Product overview *page 6*

subject to technical alteration • 2015/10/09 • 10:25 • K

Magnetic sensor MSK400/1
Compact sensor, incremental, digital interface, resolution 1 mm

Profile

- Max. resolution 1 mm
- Repeat accuracy of ±1 increment
- Works with magnetic tape MB400
- Reading distance ≤4 mm

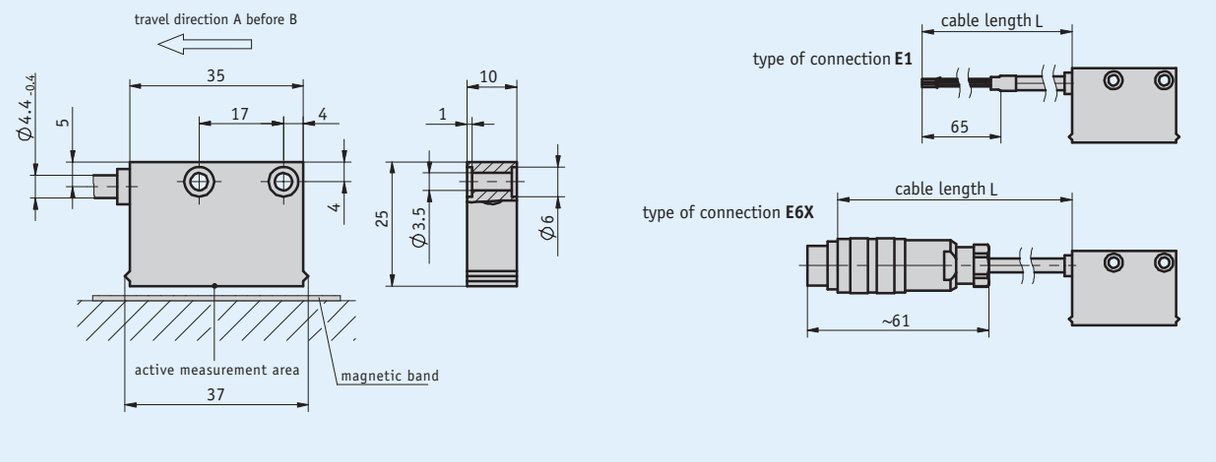

5.3

Mechanical data

Feature	Technical data	Additional information
Housing	white plastic	
Sensor/band reading distance	0.1 ... 4 mm	
Cable sheath	PUR suitable for drag-chain use	4-wire ø4.4$_{-0.4}$ mm

Electrical data

Feature	Technical data	Additional information
Operating voltage	24 V DC±20 %	reverse polarity protected
Current consumption	<20 mA	off-load
Output circuit	PP	
Output signals	A, B	90° off-phase
Output signal level high	>UB - 3.5 V	
Output signal level low	<2 V	
Real-time requirement	speed-proportional signal output	
Type of connection	open cable end	
	plug connector	7-pole

Signal patterns

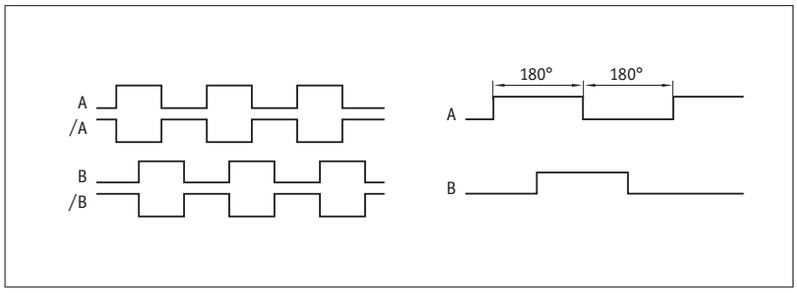

System data

Feature	Technical data	Additional information
Resolution	1 mm	with quadruple evaluation
System accuracy	±(1 + 0.03 x L) mm, L in m	bei 20 °C
Repeat accuracy	±1 mm	
Measuring range	∞	
Travel speed	<10 m/s	

Ambient conditions

Feature	Technical data	Additional information
Ambient temperature	-10 ... 70 °C	
Storage temperature	-30 ... 80 °C	
Relative humidity	100 %	condensation admissible
EMC	EN 61000-6-2	interference resistance / immission
	EN 61000-6-4	emitted interference / emission
Protection category	IP67	EN 60529
Shock resistance	500 m/s^2, 11 ms	EN 60068-2-27
Vibration resistance	100 m/s^2, 5 ... 150 Hz	EN 60068-2-6

Pin assignment

Not inverted

Signal	E1	E6X
GND	black	1
A	red	2
B	orange	3
nc		4
+UB	brown	5
nc		6
nc		7
Shielding	white	

Hint for mounting

A, Sensor/tape reading distance	≤4 mm
B, Lateral offset	±2 mm
C, Alignment error	±3°
D, Longitudinal inclination	±3°
E, Lateral inclination	±3°

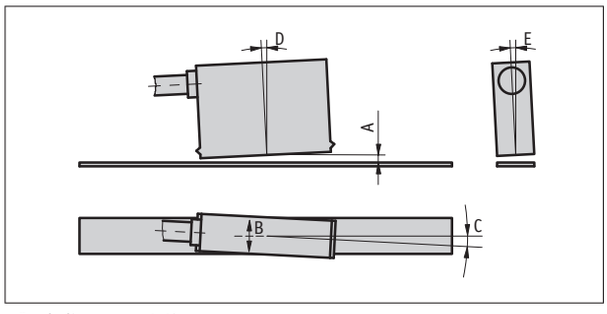

Symbolic representation

Order

Ordering information

one or more system components are required:

Magnetic band MB400 page 128

Ordering table

Feature	Ordering data		Specification	Additional information
Type of connection	E1	A	open cable ends	
	E6X		round connector without mating connector	
			cable extension on request	
Cable length	...	B	01.0 ... 20 m, in intervals of 1 m	
			others on request	

Order key

MSK400/1 - [ ] - [ ]

A B

5.3

Scope of delivery: *MSK400/1, Mounting instructions, Fastening set*

Additional information:

Quick start, technical details *page 126*
Product overview *page 6*

subject to technical alteration • 2015/10/09 • 10:25 • K

Profile

- Linear resolution 0.25 mm
- Repeat accuracy of ±1 increment
- Operating voltage 5 or 24 V
- Works with magnetic tape MB2000
- Reading distance ≤10 mm

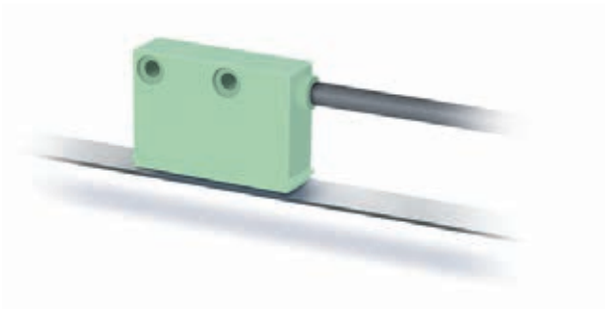

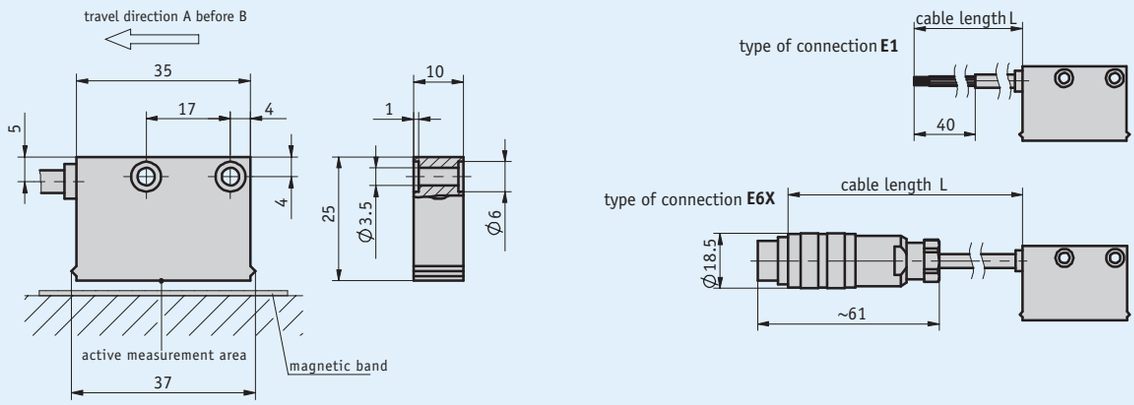

Mechanical data

Feature	Technical data	Additional information
Housing	light green plastic	
Sensor/band reading distance	1 ... 10 mm	
Cable sheath	PUR, suitable for drag-chain use	4-wire ø4.4$_{-0.4}$ mm; 6, 8-wire ø5$_{-0.4}$ mm

Electrical data

Feature	Technical data	Additional information
Operating voltage	10 ... 30 V DC	reverse polarity protected
	5 V DC ±5 %	no reverse polarity protection
Current consumption	<50 mA	PP, unloaded
	<25 mA	LD
Output circuit	PP, LD (RS422)	
Output signals	A, A/, B, B/, I, I/	90° off-phase
Output signal level high	UB - 2.5 V	PP
	RS422 specific	LD
Output signal level low	<0.8 V	PP
	RS422 specific	LD
Pulse width of reference signal	1 increment(s)	
Real-time requirement	speed-proportional signal output	
Type of connection	open cable end	
	plug connector	7/8-pole

Signal patterns

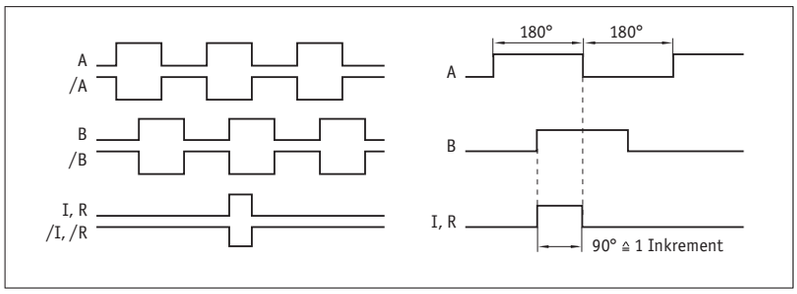

The logical condition of signals A and B is not defined in reference to the index signal I or the reference signal R. It can deviate from the signal form.

System data

Feature	Technical data	Additional information
Resolution	0.25, 1 mm	
System accuracy	±(1 + 0.03 x L) mm, L in m	bei 20 °C
Repeat accuracy	±1 increment(s)	
Measuring range	∞	
Travel speed	≤25 m/s	

Ambient conditions

Feature	Technical data	Additional information
Ambient temperature	-10 ... 70 °C	
Storage temperature	-30 ... 80 °C	
Relative humidity	100 %	condensation admissible
EMC	EN 61000-6-2	interference resistance / immission
	EN 61000-6-4	emitted interference / emission
Protection category	IP67	EN 60529
Shock resistance	500 m/s², 11 ms	EN 60068-2-27
Vibration resistance	100 m/s², 5 ... 150 Hz	EN 60068-2-6

Pin assignment

Not inverted

Signal	E1	E6X
GND	black	1
+UB	brown	2
A	red	3
B	orange	4
nc		5
nc		6
nc		7

Inverted

Signal	E1	E6X
A	red	1
B	orange	2
nc		3
+UB	brown	4
GND	black	5
/A	yellow	6
/B	green	7

Inverted with reference signal

Signal	E1	E6X
A	red	1
B	orange	2
I	blue	3
+UB	brown	4
GND	black	5
/A	yellow	6
/B	green	7
/I	violet	8

Hint for mounting

A, Sensor/tape reading distance	≤10 mm
B, Lateral offset	±2 mm (10 mm tape) ±5 mm (20 mm tape)
C, Alignment error	±3°
D, Longitudinal inclination	±3°
E, Lateral inclination	±3°

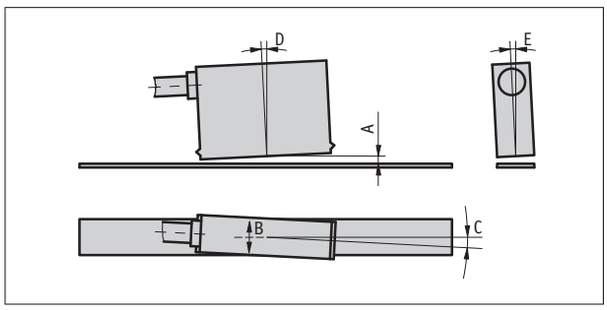

Symbolic representation

Order

Ordering information

one or more system components are required:

Magnetic band MB2000 page 130

Ordering table

Feature	Ordering data		Specification	Additional information
Operating voltage	4	A	24 V DC	
	5		5 V DC	
Type of connection	E1	B	open cable ends	
	E6X		round connector without mating connector	
			cable extensions on request	
Cable length	...	C	01.0 ... 20 m, in intervals of 1 m	
			others on request	
Output circuit	PP	D	Push-Pull	only with operating voltage 4
	LD		Line Driver	
Output signal	NI	E	not inverted	
	I		inverted	
Reference signal	0	F	without	
	I		periodic index	
Resolution	...	G	0.25, 1 in mm	

Order key

MSK2000 - [A] - [B] - [C] - [D] - [E] - [F] - [G]

Scope of delivery: *MSK2000, Mounting instructions, Fastening set*

Additional information:

Quick start, technical details *page 126*
Product overview *page 6*

subject to technical alteration • 2015/10/09 • 10:25 • K

Magnetic sensor MSK4000
Compact sensor, incremental, digital interface, reading distance 20 mm

Profile

- Max. resolution of 0.25 mm
- Repeat accuracy ±2 increments (max. ±0.5 mm)
- Works with magnetic tape MB4000
- Reading distance ≤20 mm

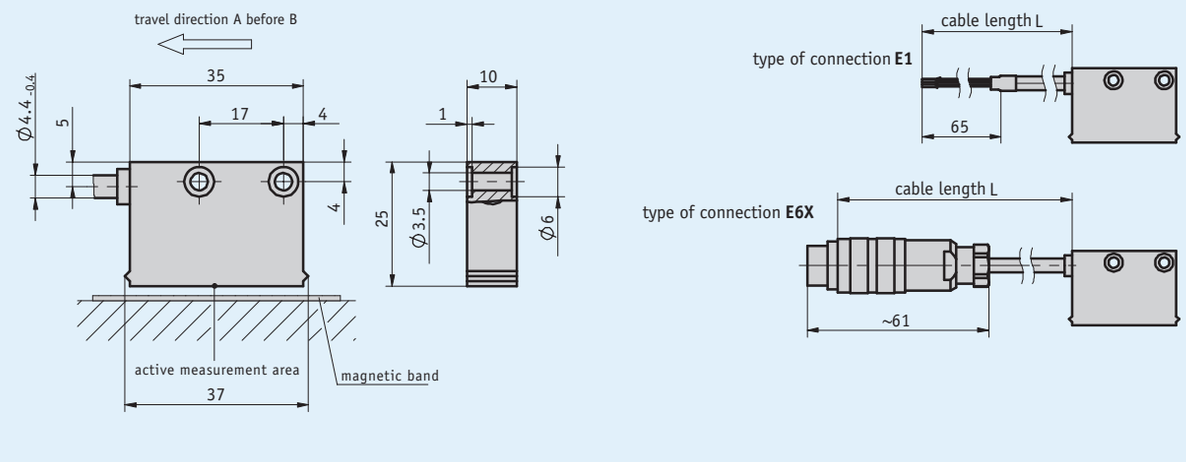

Mechanical data

Feature	Technical data	Additional information
Housing	plastic ABS gray	
Sensor/band reading distance	5 ... 20 mm	
Cable sheath	PUR, suitable for drag-chain use	4-wire ø4.4$_{-0.4}$ mm; 6, 8-wire ø5$_{-0.4}$ mm

Electrical data

Feature	Technical data	Additional information
Operating voltage	24 V DC ±20 %	reverse polarity protected
	5 V DC ±5 %	no reverse polarity protection
Current consumption	<50 mA	PP, unloaded
	<25 mA	LD
Output circuit	PP, LD (RS422), TTL	
Output signals	A, A/, B, B/, I, I/	90° off-phase
Output signal level high	UB - 2.5 V	PP
	RS422 specific	LD
	>2.4 V	TTL
Output signal level low	<0.8 V	PP
	RS422 specific	LD
	<0.4 V	TTL
Pulse width of reference signal	1 increment(s)	
Real-time requirement	speed-proportional signal output	
Type of connection	open cable end	
	plug connector	7/8-pole

Signal patterns

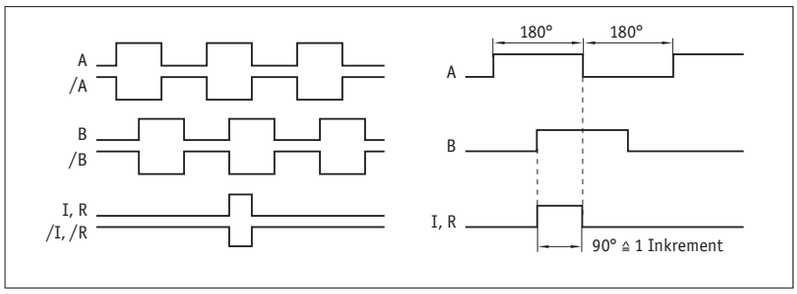

The logical condition of signals A and B is not defined in reference to the index signal I or the reference signal R. It can deviate from the signal form.

System data

Feature	Technical data	Additional information
Resolution	0.25, 0.5, 1, 2 mm	
System accuracy	±2 mm	length-dependent error depends on the mounting situation
Repeat accuracy	±2 increment(s)	
Measuring range	∞	
Travel speed	<15 m/s	

Ambient conditions

Feature	Technical data	Additional information
Ambient temperature	-10 ... 70 °C	
Storage temperature	-30 ... 80 °C	
Relative humidity	100 %	condensation admissible
EMC	EN 61000-6-2	interference resistance / immission
	EN 61000-6-4	emitted interference / emission
Protection category	IP67	EN 60529
Shock resistance	500 m/s², 11 ms	EN 60068-2-27
Vibration resistance	100 m/s², 5 ... 150 Hz	EN 60068-2-6

Pin assignment

Not inverted

Signal	E1	E6X
GND	black	1
+UB	brown	2
A	red	3
B	orange	4
nc		5
nc		6
nc		7

Inverted

Signal	E1	E6X
A	red	1
B	orange	2
nc		3
+UB	brown	4
GND	black	5
/A	yellow	6
/B	green	7

Inverted with reference signal

Signal	E1	E6X
A	red	1
B	orange	2
I	blue	3
+UB	brown	4
GND	black	5
/A	yellow	6
/B	green	7
/I	violet	8

Hint for mounting

A, Sensor/tape reading distance	5 ... 20 mm
B, Lateral offset	±5 mm
C, Alignment error	±10°
D, Longitudinal inclination	±3°
E, Lateral inclination	±3°

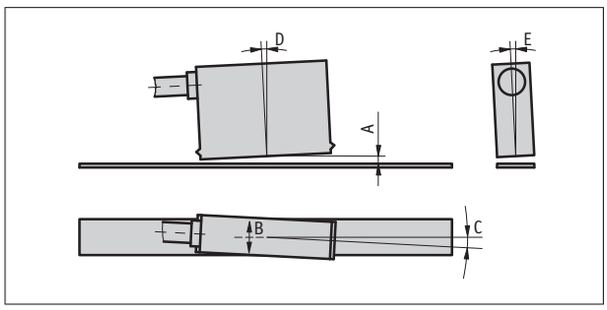

Symbolic representation

Order

Ordering information

one or more system components are required:

Magnetic band MB4000 page 132

Ordering table

Feature		Ordering data	Specification	Additional information
Operating voltage	A	4	10 ... 30 V DC	
		5	5 V DC	
Type of connection	B	E1	open cable ends	
		E6X	round connector without mating connector	
			cable extension on request	
Cable length	C	...	01.0 ... 20 m, in intervals of 0.1 m	
			others on request	
Output circuit	D	PP	Push-Pull	only with operating voltage 4
		LD	Line Driver	
		TTL	TTL	only with NI output circuit
Output signal	E	NI	not inverted	
		I	inverted	not with TTL output circuit
Reference signal	F	0	without	
		I	periodic index	only with I output signal
Resolution	G	...	0.25, 0.5, 1, 2 in mm	

Order key

MSK4000 - [ ] - A - [ ] - [ ] - [ ] - [ ] - [ ] - [ ] - [ ]

A B C D E F G

Scope of delivery: *MSK4000, Mounting instructions, Fastening set*

Additional information:

Quick start, technical details *page 126*

Product overview *page 6*

subject to technical alteration • 2015/10/09 • 10:25 • K

5.4

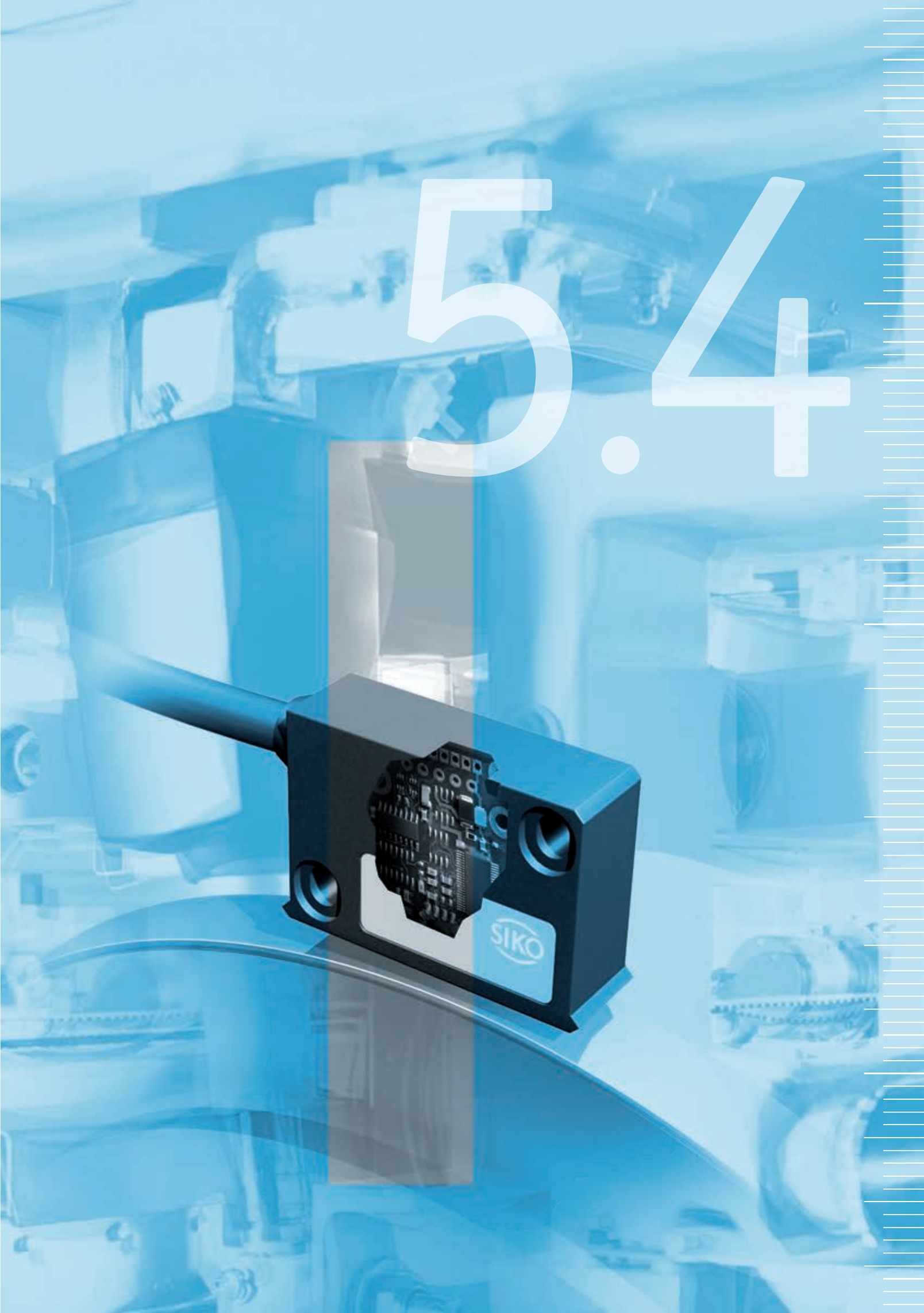

5.0 | Overview 3
5.1 | MagLine Micro 15
5.2 | MagLine Basic 49
5.3 | MagLine Macro 125

5.4 | MagLine Roto

Quick start, technical details		146
Product matrix		147
Products	MR200	148
	MR320	150
	MR500	152
	MRI01	154
	MBR100	156
	MBR200	158
	MBR320	160
	MBR500	162
	LE100/1 rotativ	164
	MSK210 rotativ	168
	MSK320 rotativ	172
	MSK5000 rotativ	176

5.5 | Accessories 183
5.6 | Appendix 195
5.7 | Product index, contact information 203

Introduction

With all the advantages of magnetic, contactless scanning, MagLine Roto is designed for direct angle and speed measurement. Special sensors scan the incremental graduation of magnetic rings and supply a resolution of up to 200 000 pulses per minute.

Typical applications of the system are speed measurement on drive units or angle measurement, for example on rotary tables. The compact design permits integration either directly or next to the control or machining process.

- Resolutions up to 0.0018°
- System accuracy ± 0.1°
- Rotary encoder system with protection category IP67

Magnetic ring
Up to 200 000 pulses/rev.
Accuracy up to 0.1°

Sensors
Direct connection to translation module and magnetic displays
Max. tolerance of reading distance to scale 2 mm

Translation module
Incremental position tracking
Real-time signal processing
Resolutions up to 0.0018°

Introduction to the rotary system

MagLine Roto is an incremental measuring system. For this reason a wide range of magnetic band and ring diameters are possible. In a system with a set referencing point (ordering option) re-referencing is performed after each full rotation (360°) due to the rotary magnetic measurement, as the reference point is automatically traversed and the system therefore starts with an additional, origin-related measurement operation. Reference operations with the Roto system only require a negligible period of time.

A direct product comparison is possible in the matrix opposite. Roto measurement systems comprise the individual components of sensor and magnetic band or ring. The available sensors support signal evaluation via digital outputs or analog interfaces.

Corresponding individual components can be combined and therefore adapted optimally to existing measuring conditions. Values obtained in a rotary system are either displayed directly (e.g., speed monitoring) or can be processed in follow-on electronic units or higher-level controllers.

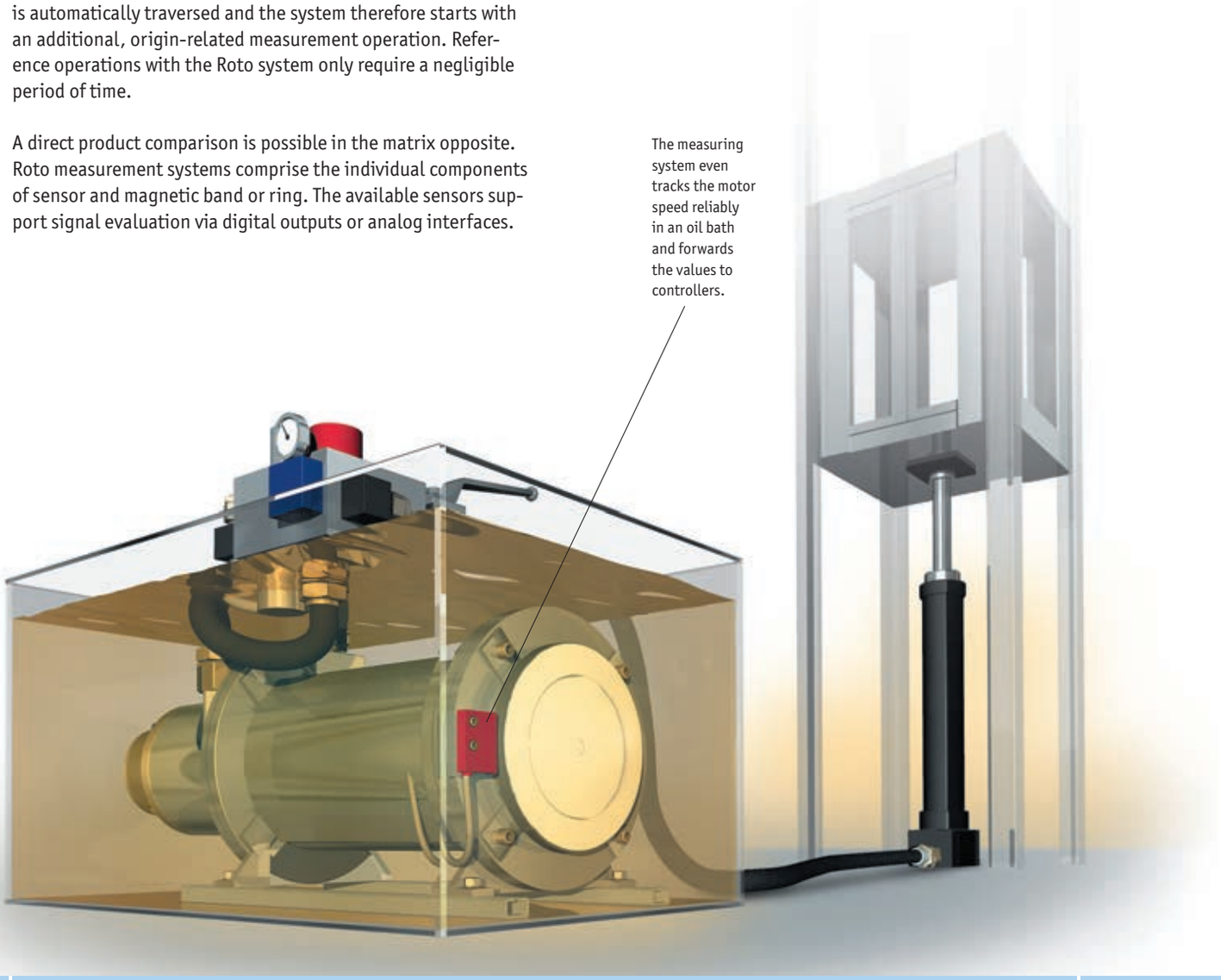

MagLine Roto

	Incremental systems							
Signal analysis via	**Output, analog**	**Output, digital**						
System accuracy class [mm]	*)	*)	±0.1°	±0.1°	±0.5°	*)	±0.1°	*)
Maximum repeat accuracy [increment]	–	±1	±1	±1	±1	±1	±1	±1
Maximum reading distance [without reference point, mm]	0.4	0.8	0.8	2.0	2.0	2.0	2.0	2.0

Supply voltage	Output/ interface	Magnetic sensor	Page							
10.5 ... 30 V DC 5 V DC	1 V_{SS}	**LE100/1**	164							
24 V DC 5 V DC	PP, LD, TTL	**MSK210**	168							
24 V DC 5 V DC	PP, LD, TTL	**MSK320**	172							
6.5 ... 30 V DC 4.75 ... 6 V DC	PP, LD	**MSK5000**	176							

Max. number of poles	Max. pulses/ revolution	Magnetic ring								
100	2000	**MR200**	148							
250	5000	**MR320**	150							
160	200000	**MR500**	152							
64	1280	**MRI01**	154							
1120	1120 **)	**MBR100**	156							
230	4600	**MBR200**	158							
250	5000	**MBR320**	160							
210	262500	**MBR500**	162							

*) depends on mounting type **) Periods/revolution

5.4

Magnetic ring MR200
Incrementally coded ring with permanently connected flange, pole length 2 mm

Profile

- Easy hollow-shaft mounting
- Rotary encoder system with IP67 protection category (in combination with MSK210)
- Up to 2000 pulses/revolution (8000 increments)
- With reference point as an option

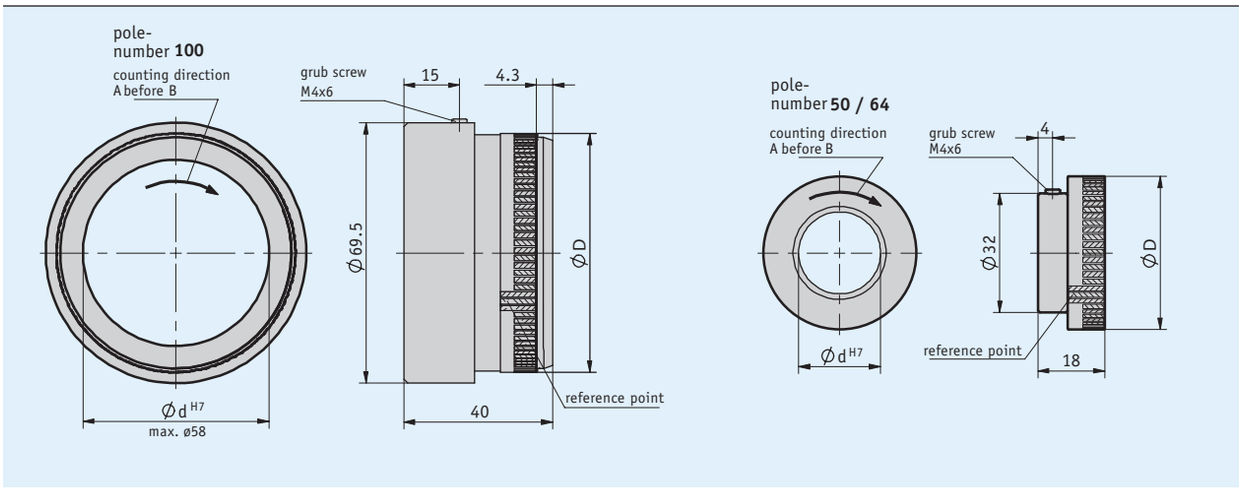

Mechanical data

Feature	Technical data	Additional information
Flange	aluminum	

- **Table of dimensions**

Poles	50	64	100
Diameter D [mm]	32.3	41.2	64.14
Circumference [mm]	100	130	200
Speed [min^{-1}]	≤15000	≤11500	≤7500

System data

Feature	Technical data	Additional information
Pole length	2 mm	
System accuracy	±0.1°	
Measuring range	360°	

Pulses/revolution

Pole number		50	64	100
Sensor scaling factor	20	1000	1280	2000
	16	800	1024	1600
	10	500	640	1000
	8	400	512	800
	5	250	320	500
	4	200	256	400
	1	50	64	100

The table applies to the combination of MR200 with MSK210

Ambient conditions

Feature	Technical data	Additional information
Ambient temperature	0 ... 60 °C	50, 64 pole number
	-20 ... 70 °C	100 pole number
Storage temperature	-20 ... 70 °C	
Relative humidity	100 %	condensation admissible
Protection category	IP67	EN 60529

Order

Ordering table

Feature	Ordering data		Specification	Additional information
Pole number	50	A	50 poles	hard ferrite
	64		64 poles	hard ferrite
	100		100 poles	flexible magnetic tape
			others on request	
Bore/diameter	20	B	ø20 mm	
			others on request	
Type of fastening	MNG	C	hub thread	
	ONG		without hub thread	
Reference point	0	D	without	
	M		with	

Order key

MR200 - [ ] - [ ] - [ ] - [ ]
A B C D

Scope of delivery: MR200

Additional information:
Quick start, technical details *page 146*
Product overview *page 6*

subject to technical alteration • 2015/10/09 • 10:25 • K

Magnetic ring MR320
Incrementally coded ring with permanently connected flange, pole length 3.2 mm

Profile

- Easy hollow-shaft mounting
- Rotary encoder system with IP67 protection category (in combination with MSK320)
- Up to 5000 pulses/revolution (20 000 increments)
- With reference point as an option

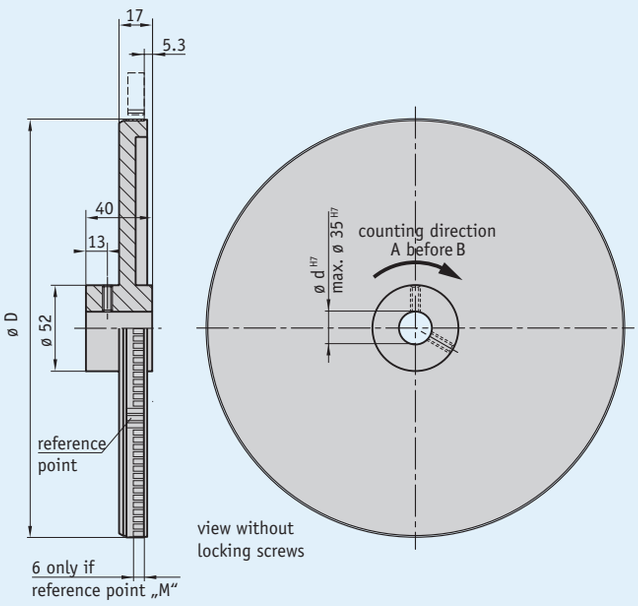

Mechanical data

Feature	Technical data	Additional information
Flange	aluminum	

- **Table of dimensions**

Poles	100	150	180	250
Diameter D [mm]	100	151	181	253
Circumference [mm]	320	480	570	800
Speed [min^{-1}]	≤4680	≤3120	≤2630	≤1870

System data

Feature	Technical data	Additional information
Pole length	3.2 mm	
System accuracy	±0.1°	
Measuring range	360°	

Pulses/revolution

Pol number		100	150	180	250
Sensor scaling factor	20	2000	3000	3600	5000
	16	1600	2400	2880	4000
	10	1000	1500	1800	2500
	8	800	1200	1440	2000
	5	500	750	900	1250
	4	400	600	720	1000
	1	100	150	180	250

The table applies to the combination of MR320 with MSK320

Ambient conditions

Feature	Technical data	Additional information
Ambient temperature	-20 ... 70 °C	
Storage temperature	-20 ... 70 °C	
Relative humidity	100 %	condensation admissible

Order

Ordering table

Feature	Ordering data		Specification	Additional information
Pole number	100	A	100 poles	
	150		150 poles	
	180		180 poles	
	250		250 poles	
			others on request	
Bore/diameter	20	B	ø20 mm	
			others on request	
Reference point	0	C	without	
	M		with	

Order key

MR320 - [ ] - [ ] - MNG - [ ]
A B C

Scope of delivery: MR320

Additional information:
Quick start, technical details page 146
Product overview page 6

subject to technical alteration • 2015/10/09 • 10:25 • K

Magnetic ring MR500
Incrementally coded ring with permanently connected flange, pole length 5 mm

Profile

- Easy hollow-shaft mounting
- Rotary encoder system with IP67 protection category (in combination with MSK5000)
- Up to 200 000 pulses/revolution (800 000 increments)
- With reference point as an option

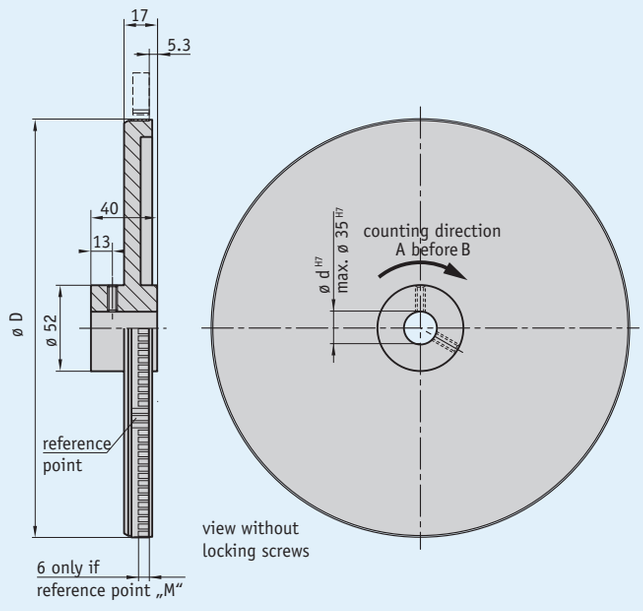

5.4

Mechanical data

Feature	Technical data	Additional information
Flange	aluminum	

- **Table of dimensions**

Poles	64	96	160
Diameter D [mm]	102	153	255
Circumference U [mm]	320	480	800
Speed [min^{-1}]	variable	variable	variable

Speed

Maximum speeds are calculated in relation to circumferential speed, with the circumference of the magnetic ring being decisive. The circumferential speed of the MSK5000 sensor is variable; it results from the selection of pulse interval and scaling factor (see table MSK5000). Speed is calculated according to the formula:

Formel:

$$n = \frac{v \times 60000}{U}$$

Beispiel:

$$n = \frac{6 \times 60000}{320} = 1125$$

Legende:

n [min^{-1}]	Drehzahl
v [m/s]	Umfangsgeschwindigkeit
60000	Erweiterungsfaktor (60 s/min x 1000 mm/m)
U [mm]	Umfang

System data

Feature	Technical data	Additional information
Pole length	5 mm	
System accuracy	±0.1°	
Measuring range	360°	

Pulses/revolution

Pole number		64	96	160
Sensor scaling factor	1250	80000	12000	200000
	250	16000	24000	40000
	125	8000	12000	20000
	50	3200	4800	8000
	25	1600	2400	4000
	12.5	800	1200	2000

The table applies to the combination of MR500 with MSK5000

Ambient conditions

Feature	Technical data	Additional information
Ambient temperature	-20 ... 70 °C	
Storage temperature	-20 ... 70 °C	
Relative humidity	100 %	condensation admissible

5.4

Order

Ordering table

Feature		Ordering data	Specification	Additional information
Pole number	A	64	64 poles	
		96	96 poles	
		160	160 poles	
			others on request	
Bore/diameter	B	20	ø20 mm	
			others on request	
Reference point	C	0	without	
		M	with	

Order key

MR500 - [ ] - [ ] - MNG - [ ]
A B C

Scope of delivery: *MR500*

Additional information:

Quick start, technical details *page 146*
Product overview *page 6*

subject to technical alteration • 2015/10/09 • 10:25 • K

Magnetic ring MRIO1
Incrementally coded ring with permanently connected flange, 64 poles

Profile

- Easy hollow-shaft mounting
- Rotary encoder system with IP67 protection category (in combination with MSK320)
- Up to 4096 pulses/revolution (16384 increments)

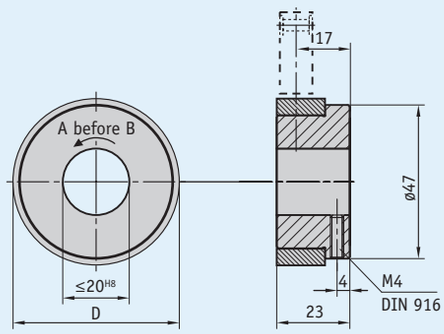

5.4

Mechanical data

Feature	Technical data	Additional information
Flange	aluminum	

- **Table of dimensions**

Poles	64
Diameter D [mm]	50
Circumference [mm]	157
Speed n [min^{-1}]	≤9550

System data

Feature	Technical data	Additional information
Pole length	2.453 mm	
System accuracy	±0.5°	
Measuring range	360°	

Pulses/revolution

Number of poles		64
Scaling factor of sensor	64	4096
	32	2048
	20	1280
	16	1024
	10	640
	8	512
	5	320
	4	256
	1	64

Table applies to the combination of MRI01 with MSK320

Ambient conditions

Feature	Technical data	Additional information
Ambient temperature	0 ... 60 °C	
Storage temperature	-20 ... 85 °C	
Relative humidity	100 %	condensation admissible

Order

Ordering table

Feature	Ordering data		Specification	Additional information
Pole number	64	A	64 poles	
			others on request	
Bore diameter	20	B	ø20 mm	
	9		ø9 mm	
			others on request	≤ø35 mm

5.4

Order key

MRI01 - [ ] - [ ] - MNG
A B

Scope of delivery: *MRI01*

Additional information:
Quick start, technical details *page 146*
Product overview *page 6*

subject to technical alteration • 2015/10/09 • 10:25 • K

Magnetic band ring MBR100
incremental, flexible magnetic tape ring for self-assembly, pole length 1 mm

Profile

- With reference point as an option
- Easy mounting on self-made carrier

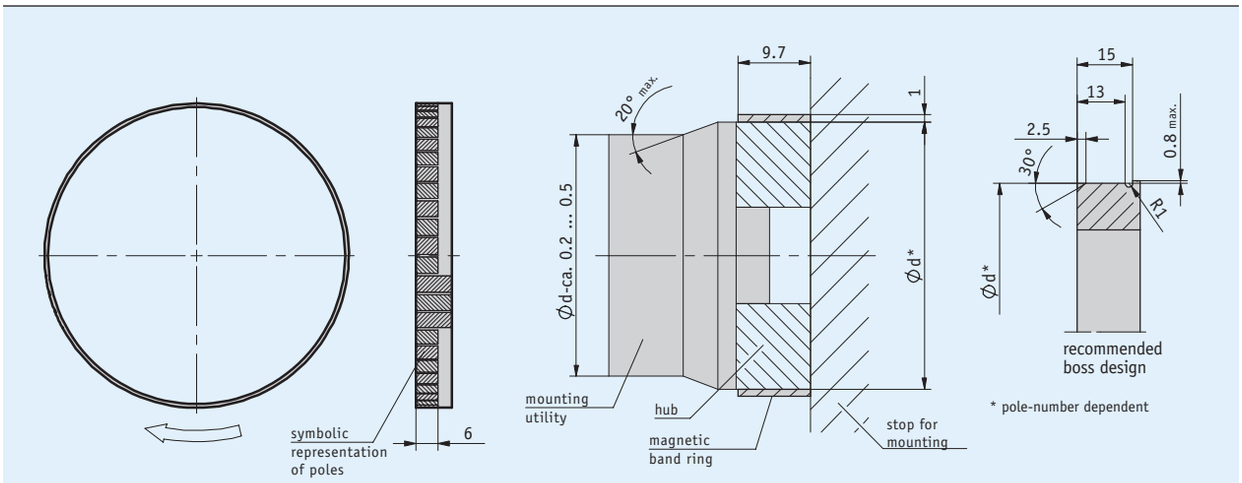

5.4

Mechanical data

Feature	Technical data	Additional information
Band width	9.7 mm	
Band thickness	1 mm	without cover strip or adhesive carrier tape
Mounting type	adhesive connection	recommended two-component adhesive: Uhu Plus 300 Endfest

Table of dimensions

Poles	460	540	720	1120
Diameter D [mm]	144.7 ±0.03	170.1 ±0.03	277.4 ±0.03	354.74 ±0.03
Diameter with MBR100 [mm]	146.7 ±0.03	172.1 ±0.03	279.4 ±0.03	356.74 ±0.03
Circumference U with MBR100 [mm]	460.87	540.67	720.68	1120.73
Speed n [min^{-1}]	≤2600	≤2210	≤1660	≤1070

System data

Feature	Technical data	Additional information
Pole length	1 mm	
Measuring range	360°	

Periods/revolution

Pole number	460	540	720	1120
Period	460	540	720	1120

The table applies to the combination of MBR100 with LE100/1

Ambient conditions

Feature	Technical data	Additional information
Ambient temperature	-20 ... 70 °C	
Storage temperature	-20 ... 70 °C	
Relative humidity	100 %	condensation admissible

Order

Ordering table

Feature	Ordering data		Specification	Additional information
Pole number	460	A	460 poles	
	540		540 poles	
	720		720 poles	
	1120		1120 poles	
			others on request	
Reference point	0	B	without	
	M		with	

Order key

MBR100 - [A] - [B]

Scope of delivery: *MBR100, Mounting instructions*

Additional information:

Quick start, technical details *page 146*
Product overview *page 6*

subject to technical alteration • 2015/10/09 • 10:25 • K

Magnetic band ring MBR200

Incremental, flexible magnetic tape ring for self-assembly, pole length 2 mm

Profile

- With reference point as an option
- Easy mounting on self-made carrier

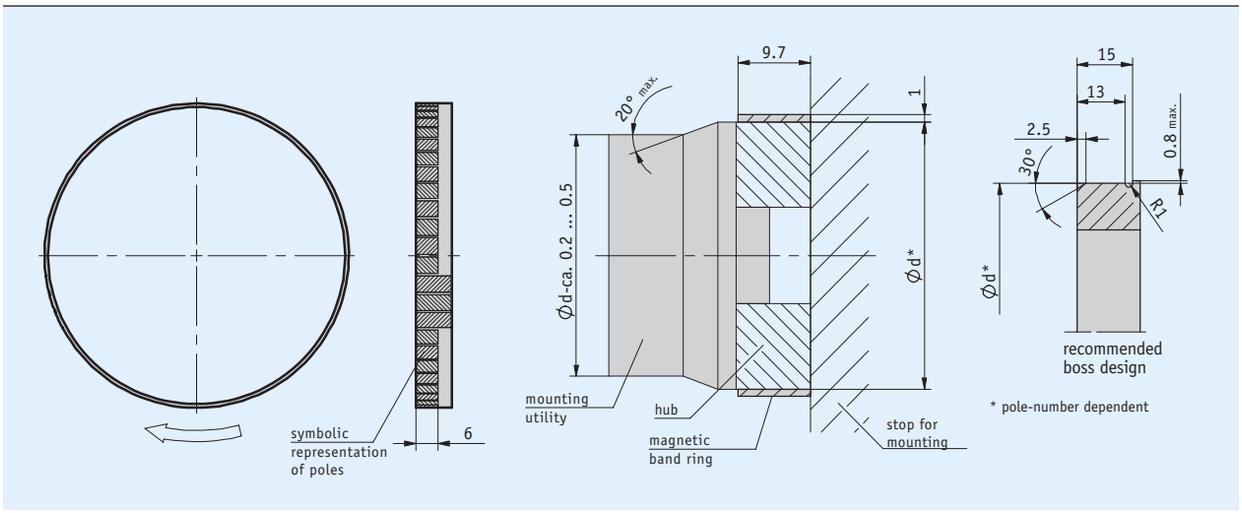

5.4

Mechanical data

Feature	Technical data	Additional information
Band width	9.7 mm	
Band thickness	1 mm	without cover strip or adhesive carrier tape
Mounting type	adhesive connection	recommended two-component adhesive: Uhu Plus 300 Endfest

Table of dimensions

Poles	50	64	100	230
Diameter D [mm]	30.7 ±0.03	39.6 ±0.03	62.6 ±0.03	144.7 ±0.03
Diameter with MBR200 [mm]	32.7 ±0.03	41.6 ±0.03	64.6 ±0.03	146.7 ±0.03
Circumference U with MBR200 [mm]	102.73	130.69	202.95	460.87
Speed n [min^{-1}]	≤14560	≤11450	≤7380	≤3250

System data

Feature	Technical data	Additional information
Pole length	2 mm	
Measuring range	360°	

Pulses/revolution

Pole number		50	64	100	230
Sensor scaling factor	**20**	1000	1280	2000	4600
	16	800	1024	1600	3680
	10	500	640	1000	2300
	8	400	512	800	1840
	5	250	320	500	1150
	4	200	256	400	920
	1	50	64	100	230

The table applies to the combination of MBR200 with MSK210

Ambient conditions

Feature	Technical data	Additional information
Ambient temperature	-20 ... 70 °C	
Storage temperature	-20 ... 70 °C	
Relative humidity	100 %	condensation admissible

Order

Ordering table

Feature	Ordering data		Specification	Additional information
Pole number	50	A	50 poles	
	64		64 poles	
	100		100 poles	
	230		230 poles	
			others on request	
Reference point	0	B	without	
	M		with	

Order key

MBR200 - [ ] - [ ]
A B

5.4

Scope of delivery: *MBR200, Mounting instructions*

Additional information:
Quick start, technical details *page 146*
Product overview *page 6*

subject to technical alteration • 2015/10/09 • 10:25 • K

Magnetic band ring MBR320

Incremental, flexible magnetic band ring for self-assembly, pole length 3.2 mm

Profile

- With reference point as an option
- Easy mounting on self-made carrier

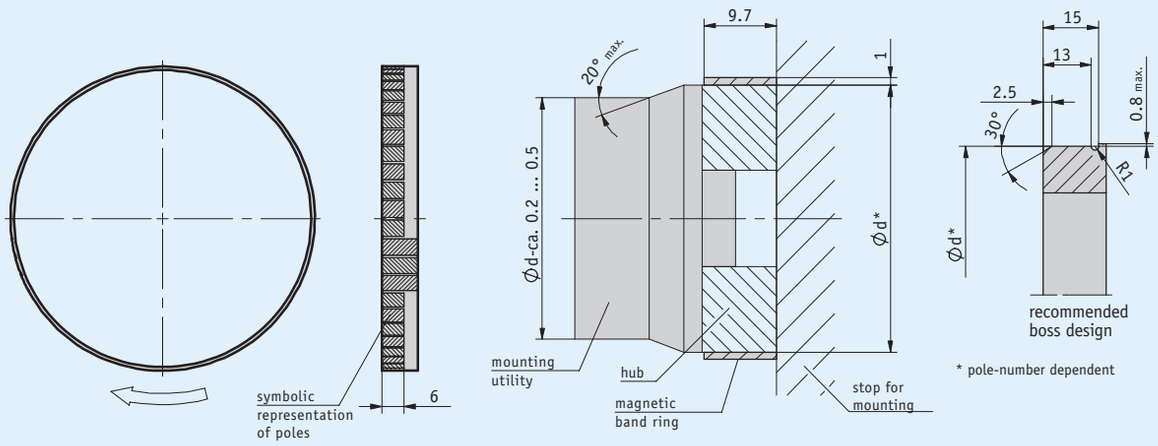

Mechanical data

Feature	Technical data	Additional information
Band width	9.7 mm	
Band thickness	1 mm	without cover strip or adhesive carrier tape
Mounting type	adhesive connection	recommended two-component adhesive: Uhu Plus 300 Endfest

Table of dimensions

Poles	36	50	100	150	180	250
Diameter D [mm]	35.7 ±0.03	49 ±0.03	100.9 ±0.03	151.8 ±0.03	182.4 ±0.03	253.7 ±0.03
Diameter with MBR320 [mm]	37.7 ±0.03	51 ±0.03	102.9 ±0.03	153.8 ±0.03	184.4 ±0.03	255.7 ±0.03
Circumference U with MBR320 [mm]	118.44	160.22	323.27	483.18	579.31	803.31
Speed n [min^{-1}]	≤12710	≤9370	≤4640	≤3100	≤2590	≤1860

System data

Feature	Technical data	Additional information
Pole length	3.2 mm	
Measuring range	360°	

Pulses/revolution

Pole number		36	50	100	150	180	250
Sensor scaling factor	**20**	720	1000	2000	3000	3600	5000
	16	576	800	1600	2400	2880	4000
	10	360	500	1000	1500	1800	2500
	8	288	400	800	1200	1440	2000
	5	180	250	500	750	900	1250
	4	144	200	400	600	720	1000
	1	36	50	100	150	180	250

The table applies to the combination of MBR320 with MSK320

Ambient conditions

Feature	Technical data	Additional information
Ambient temperature	-20 ... 70 °C	
Storage temperature	-20 ... 70 °C	
Relative humidity	100 %	condensation admissible

Order

Ordering table

Feature	Ordering data		Specification	Additional information
Pole number	36	A	36 poles	
	50		50 poles	
	100		100 poles	
	250		250 poles	
			others on request	
Reference point	0	B	without	
	M		with	

Order key

MBR320 - [ ] - [ ]
A B

5.4

Scope of delivery: *MBR320, Mounting instructions*

Additional information:

Quick start, technical details *page 146*
Product overview *page 6*

subject to technical alteration • 2015/10/09 • 10:25 • K

Magnetic band ring MBR500

Incremental, flexible magnetic band ring for self-assembly, pole length 5 mm

Profile

- With reference point as an option
- Easy mounting on self-made carrier

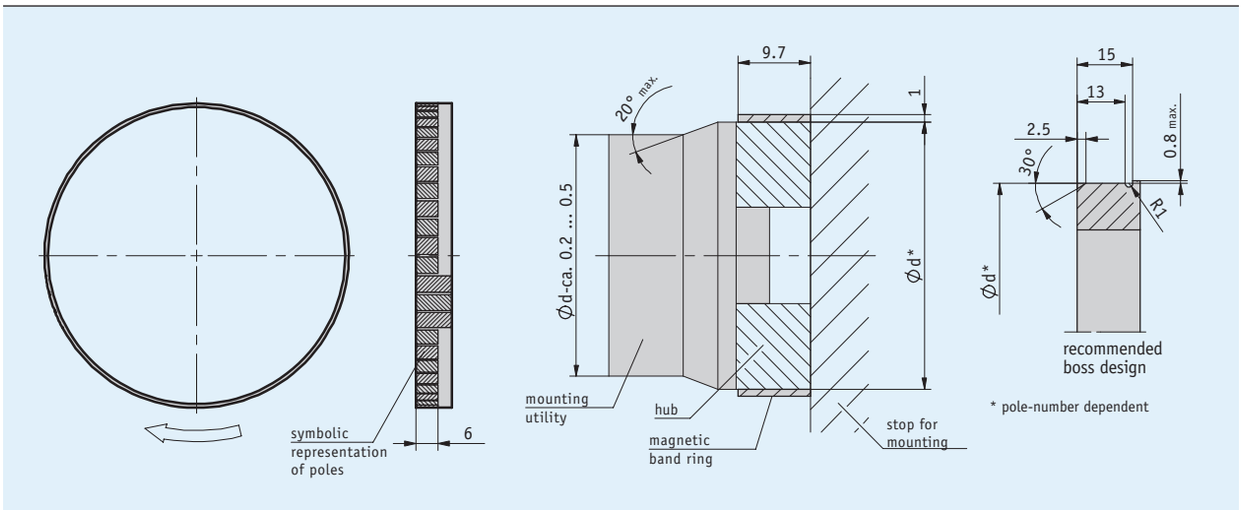

5.4

Mechanical data

Feature	Technical data	Additional information
Band width	9.7 mm	
Band thickness	1 mm	without cover strip or adhesive carrier tape
Mounting type	adhesive connection	recommended two-component adhesive: Uhu Plus 300 Endfest

Table of dimensions

Poles	36	50	64	96	160	188
Diameter D [mm]	57.5 ±0.03	79.8 ±0.03	102 ±0.03	153 ±0.03	254.8 ±0.03	299.4 ±0.03
Diameter with MBR500 [mm]	59.5 ±0.03	81.8 ±0.03	104 ±0.03	155 ±0.03	256.8 ±0.03	301.4 ±0.03
Circumference U with MBR500 [mm]	186.93	256.98	326.73	486.95	806.76	946.88
Speed n [min^{-1}]	variable	variable	variable	variable	variable	variable

Speed

Maximum speeds are calculated in relation to circumferential speed, with the circumference of the magnetic ring being decisive. The circumferential speed of the MSK5000 sensor is variable; it results from the selection of pulse interval and scaling factor (see table MSK5000). Speed is calculated according to the formula:

Formel:

$$n = \frac{v \times 60000}{U}$$

Beispiel:

$$n = \frac{6 \times 60000}{320} = 1125$$

Legende:

n [min^{-1}] Drehzahl
v [m/s] Umfangsgeschwindigkeit
60000 Erweiterungsfaktor (60 s/min x 1000 mm/m)
U [mm] Umfang

System data

Feature	Technical data	Additional information
Pole length	5 mm	
Measuring range	360°	

Pulses/revolution

Pole number		36	50	64	96	160	188
Sensor scaling factor	**1250**	45000	62500	80000	120000	200000	235000
	250	9000	12500	16000	24000	40000	47000
	125	4500	6250	8000	12000	20000	23500
	50	1800	2500	3200	4800	8000	9400
	25	900	1250	1600	2400	4000	4700
	12.5	450	625	800	1200	2000	2350

The table applies to the combination of MBR500 with MSK5000

Ambient conditions

Feature	Technical data	Additional information
Ambient temperature	-20 ... 70 °C	
Storage temperature	-20 ... 70 °C	
Relative humidity	100 % (at max. adm. torque)	condensation admissible

Order

Ordering table

Feature	Ordering data		Specification	Additional information
Pole number	36	A	36 poles	
	50		50 poles	
	64		64 poles	
	96		96 poles	
	160		100 poles	
	188		188 poles	
			others on request	
Reference point	0	B	without	
	M		with	

Order key

MBR500 - [A] - [B]

Scope of delivery: *MBR500, Mounting instructions*

Additional information:

Quick start, technical details *page 146*
Product overview *page 6*

Magnetic sensor LE100/1 rotativ
Incremental, analog interface 1 V_{SS}

Profile

- Accuracy class ±0.1°
- Status LED display
- Works with MBR100 magnetic tape ring
- Reading distance ≤0.4 mm
- Signal period 1000 µm
- Output circuit sin/cos 1 V_{SS}
- Robust metal housing

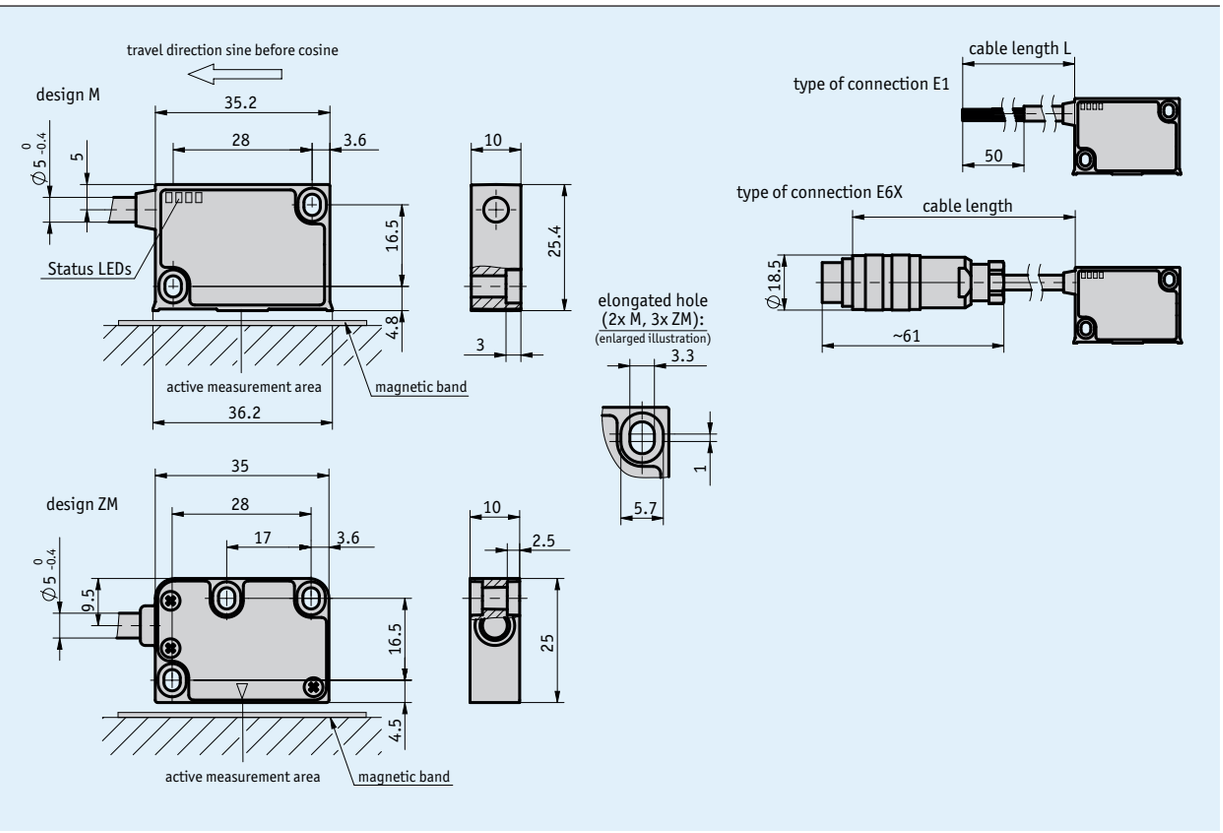

Mechanical data

Feature	Technical data	Additional information
Housing	zinc die-cast/aluminum	M design
	zinc die-cast	ZM design
Sensor/ring reading distance	0.1 ... 0.4 mm	reference signal O, IA, ID
	0.1 ... 0.2 mm	reference signal RB, RD
Cable sheath	PUR, suitable for drag-chain use	6, 8-adrig ø$5_{-0.4}$ mm

Electrical data

Feature	Technical data	Additional information
Operating voltage	10.5 ... 30 V DC	reverse polarity protected
	5 V DC ±5 %	no reverse polarity protection
Current consumption	<25 mA	at 24 V DC
	<50 mA	at 5 V DC
Output signals	sin, /sin, cos, /cos, index, /index	
Output voltage	1 V_{PP} ±10 %	at 0 ... 70 °C, 120 Ω teminal resistance
Output impedance	0 Ω (R_{Load} >75 Ω)	short-circuit proof
Signal period	1000 µm	
Offset voltage	2.5 V, ±100 mV	sine/cosine mean to GND (10.5 ... 30 V DC)
	VCC/2 ±100 mV	sine/cosine mean to GND (5 V DC)
Phasing	90°±1°, ±3° (20 kHz)	sin/cos
	45°	sin (reference signal)
	135°	cos (reference signal)
Real-time requirement	speed-proportional signal output	
Type of connection	open cable end	
	plug connector	7/8-pole

Signal pattern

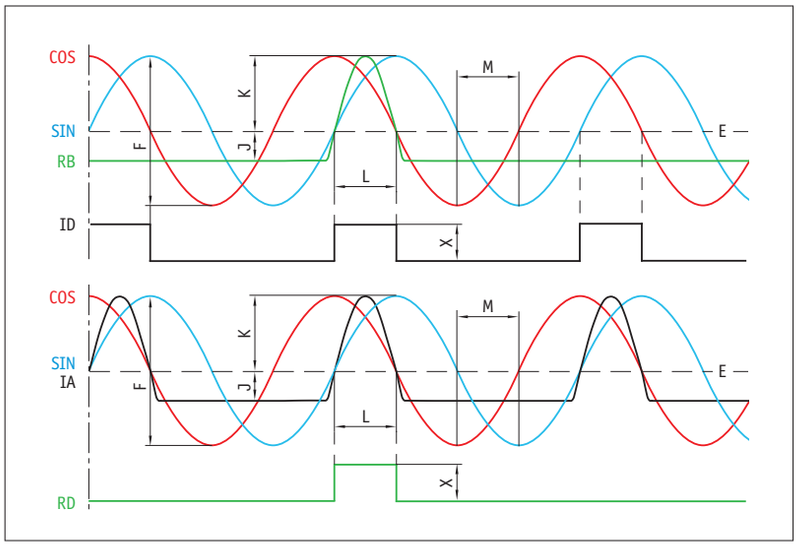

E: Reference voltage 2.5 V
F: 1 V_{SS} ±10 %
J: ≥0.2 V
K: ≥0.3 V
L: 100° ±20 %
M: 90° ±1.0° / ±3° (25 kHz)
X: 1 V_{SS}

System data

Feature	Technical data	Additional information
System accuracy	≤1 %	based on graduation period
Repeat accuracy	1 µm	
Measuring range	∞	
Circumferential speed	≤20 m/s	

Ambient conditions

Feature	Technical data	Additional information
Ambient temperature	-10 ... 70 °C	
Storage temperature	-30 ... 80 °C	
Relative humidity	100 %	condensation admissible
EMC	EN 61000-6-2	interference resistance / immission
	EN 61000-6-4	emitted interference / emission
Protection category	IP67	EN 60529
Shock resistance	500 m/s², 11 ms	EN 60068-2-27
Vibration resistance	200 m/s², 50 Hz ... 2 kHz	EN 60068-2-6

Pin assignment

Without reference signal

Signal	E1	E6X
GND	black	1
sin	red	2
/sin	orange	3
cos	yellow	4
/cos	green	5
+UB	brown	6
nc		7

With reference signal

Signal	E1	E6X
sin	red	1
cos	yellow	2
index	blue	3
+UB	brown	4
GND	black	5
/sin	orange	6
/cos	green	7
/index	violet	8

Hint for mounting

For systems with reference points on the magnetic ring please take care that sensor and ring are aligned correctly (see picture).

Reference signal	O, I	R
A, Sensor/ring reading distance	≤0.4 mm	≤0.2 mm
B, Lateral offset	±2 mm	±0.5 mm
C, Alignment error	±3°	±1°
D, Longitudinal inclination	±1°	±1°
E, Lateral inclination	±3°	±3°

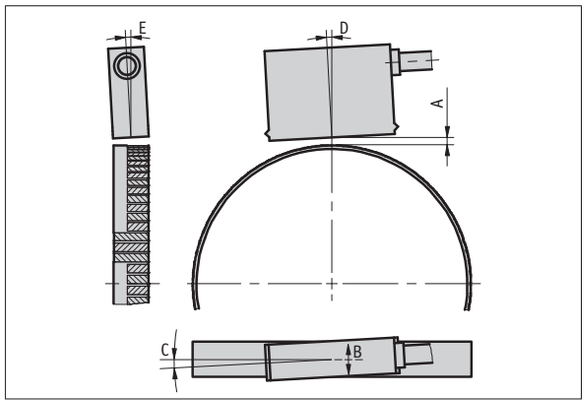

(symbolic sensor representation)

5.4

Order

Ordering information

one or more system components are required:

Magnetic band ring MBR100 page 156

Ordering table

Feature	Ordering data		Specification	Additional information
Operating voltage	10	A	10.5 ... 30 V DC	
	5		5 V DC ±5 %	
Design	M	B	metal housing with status LEDs	
	ZM		metal housing without status LEDs	
Type of connection	E1	C	open cable end	
	E6X		bullet connector without mating connector	
			cable extension on request	
Cable length	...	D	1 ... 20 m, in steps of 1 m	
			others on request	
Reference signal	0	E	without	
	IA		periodic index (analog)	index signal every 1 mm
	ID		periodic index (digital)	index signal every 1 mm
	RB		fixed, tape side (analog)	
	RD		fixed, tape side (digital)	

Order key

LE100/1 rotativ - [ ] - [ ] - [ ] - [ ] - [ ]
A B C D E

5.4

Scope of delivery: *LE100/1 rotativ, Mounting instructions, Fastening set*

Additional information:

Quick start, technical details *page 146*
Product overview *page 6*

subject to technical alteration • 2015/10/09 • 10:25 • K

Magnetic sensor MSK210 rotativ
Compact sensor, incremental, digital interface, scaling factor 64

Profile

- max. resolution 0.045° with MR200 and MBR200 (100 poles)
- Repeat accuracy of ±1 increment
- Works with MR200 magnetic ring, MBR200 magnetic tape ring
- Reading distance ≤0.8 mm
- Max. 4600 pulses/revolution with MBR200 (230 poles)

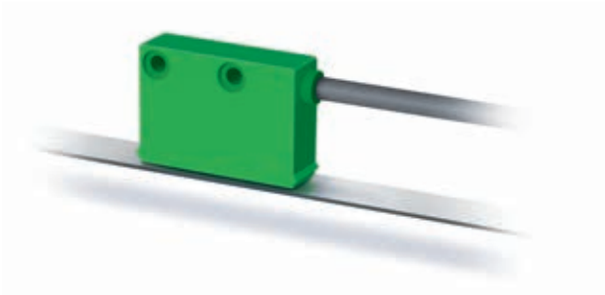

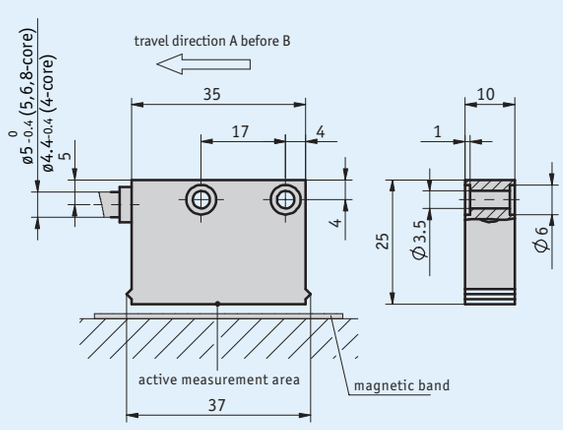

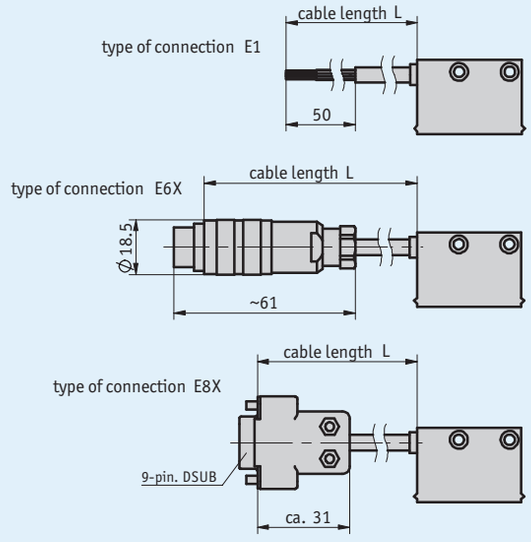

5.4

Mechanical data

Feature	Technical data	Additional information
Housing	green plastic	
Sensor/ring reading distance	0.1 ... 0.8 mm	0, I reference signals
	0.1 ... 0.4 mm	R reference signal
Cable sheath	PUR suitable for drag-chain use	4-wire ø4.4$_{-0.4}$ mm; 5, 6, 8-wire ø5$_{-0.4}$ mm

Electrical data

Feature	Technical data	Additional information
Operating voltage	24 V DC±20 %	reverse polarity protected
	5 V DC ±5 %	no reverse polarity protection
Current consumption	<20 mA	at 24 V DC, off-load
	<75 mA	loaded
Output circuit	PP, LD (RS422), TTL	PP only with 24 V
Output signals	A, A/, B, B/, I, I/, R, R/	quadrature signal
Output signal level high	>UB - 2.5 V	PP
	>2.5 V	LD
	>2.4 V	TTL
Output signal level low	<0.8 V	PP
	<0.5 V	LD
	<0.4 V	TTL
Jitter	<15 %	0.5 mm reading distance
Pulse width of reference signal	1 increment(s)	
Real-time requirement	speed-proportional signal output	
Type of connection	open cable end	
	plug connector	7/8-pole
	D-Sub	9-pole

Signal pattern

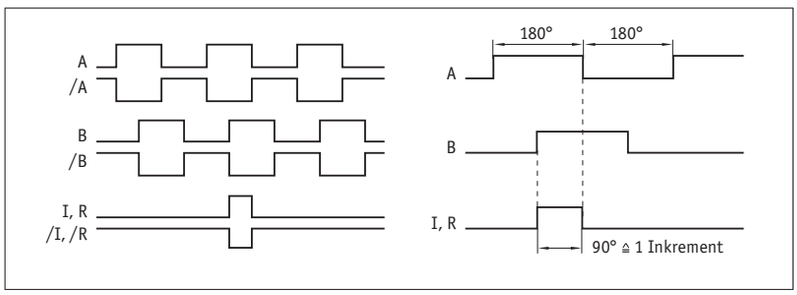

The logical condition of signals A and B is not defined in reference to the index signal I or the reference signal R. It can deviate from the signal form.

5.4

System data

Feature	Technical data	Additional information
Scaling factor	1, 5, 10, 20, 64	
System accuracy	±0.1°	
Repeat accuracy	±1 increment(s)	
Measuring range	∞	
Circumferential speed	≤25 m/s	≤2 m/s referencing speed

Ambient conditions

Feature	Technical data	Additional information
Ambient temperature	-10 ... 70 °C	
Storage temperature	-30 ... 80 °C	
Relative humidity	100 %	condensation admissible
EMC	EN 61000-6-2	interference resistance / immission
	EN 61000-6-4	emitted interference / emission
Protection category	IP67	EN 60529
Shock resistance	500 m/s^2, 11 ms	EN 60068-2-27
Vibration resistance	100 m/s^2, 5 ... 150 Hz	EN 60068-2-6

Pin assignment

Not inverted without reference signal

Signal	E1	E6X	E8X
GND	black	1	1
+UB	brownn	2	2
A	red	3	3
B	orange	4	4
nc		5	5
nc		6	6
nc		7	7
nc			8
nc			9

Inverted without reference signal

Signal	E1	E6X	E8X
A	red	1	1
B	orange	2	2
nc		3	3
+UB	brown	4	4
GND	black	5	5
A/	yellow	6	6
B/	green	7	7
nc			8
nc			9

Inverted with reference signal

Signal	E1	E6X	E8X
A	red	1	1
B	orange	2	2
I	blue	3	3
+UB	brown	4	4
GND	black	5	5
A/	yellow	6	6
B/	gren	7	7
I/	violet	8	8
nc			9

Hint for mounting

For systems with reference points on the magnetic ring please take care that sensor and ring are aligned correctly (see picture).

Reference signal	O, I	R
A, Sensor/ring reading distance	≤0.8 mm	≤0.4 mm
B, Lateral offset	±2 mm	±0.5 mm
C, Alignment error	±1°	±1°
D, Longitudinal inclination	±1°	±1°
E, Lateral inclination	±3°	±3°

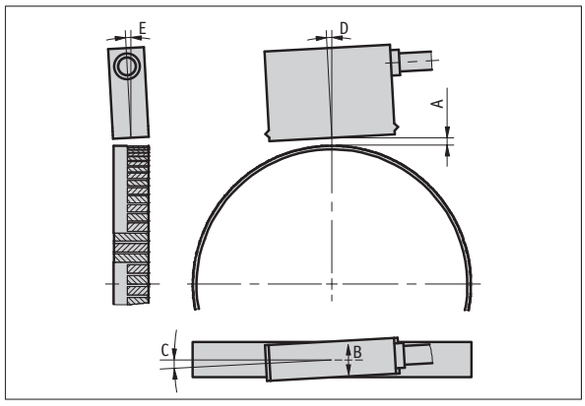

(symbolic sensor representation)

Order

Ordering information

one or more system components are required:

Magnetic ring MR200	page 148
Magnetic band ring MBR200	page 158

Ordering table

Feature	Ordering data		Specification	Additional information
Operating voltage	4	A	24 V DC ±20%	
	5		5 V DC ±5%	
Type of connection	E1	B	open cable end	
	E6X		bullet connector without mating connector	
	E8X		D-SUB 9-pole without mating connector	
			cable extensions on request	
Cable length	...	C	1 ... 20 m, in steps of 1 m	
			others on request	
Output circuit	PP	D	push-pull	only with operating voltage 4
	LD		LineDriver	
	TTL		TTL	only with non-inverted output signal, cable length ≤5 m
Output signal	NI	E	not inverted	
	I		inverted	
Reference signal	0	F	without	
	I		periodic index	index signal every 2 mm
	R		fixed reference	
Scaling factor	...	G	1, 5, 10, 20, 64	
			others on request	

Order key

MSK210 rotativ - [ ] - A - [ ] - [ ] - [ ] - [ ] - [ ] - [ ] - [ ] - [ ]
A B C D E F G

Scope of delivery: *Fastening set, Mounting instructions, MSK210 rotativ*

Additional information:

Quick start, technical details	*page 146*
Product overview	*page 6*

subject to technical alteration • 2015/10/09 • 10:25 • K

Magnetic sensor MSK320 rotativ
Compact sensor, incremental, digital interface, scaling factor 64

Profile

- max. resolution 0.018° with MR320 and MBR320 (250 poles)
- Repeat accuracy of ±1 increment
- Works with MR320 magnetic ring, MBR320 magnetic tape ring
- Reading distance ≤2 mm
- Max. 5000 pulses/revolution with MR320 and MBR320 (250 poles)

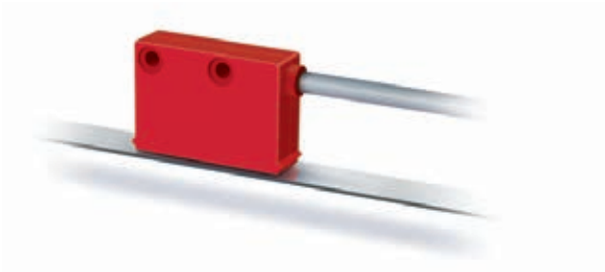

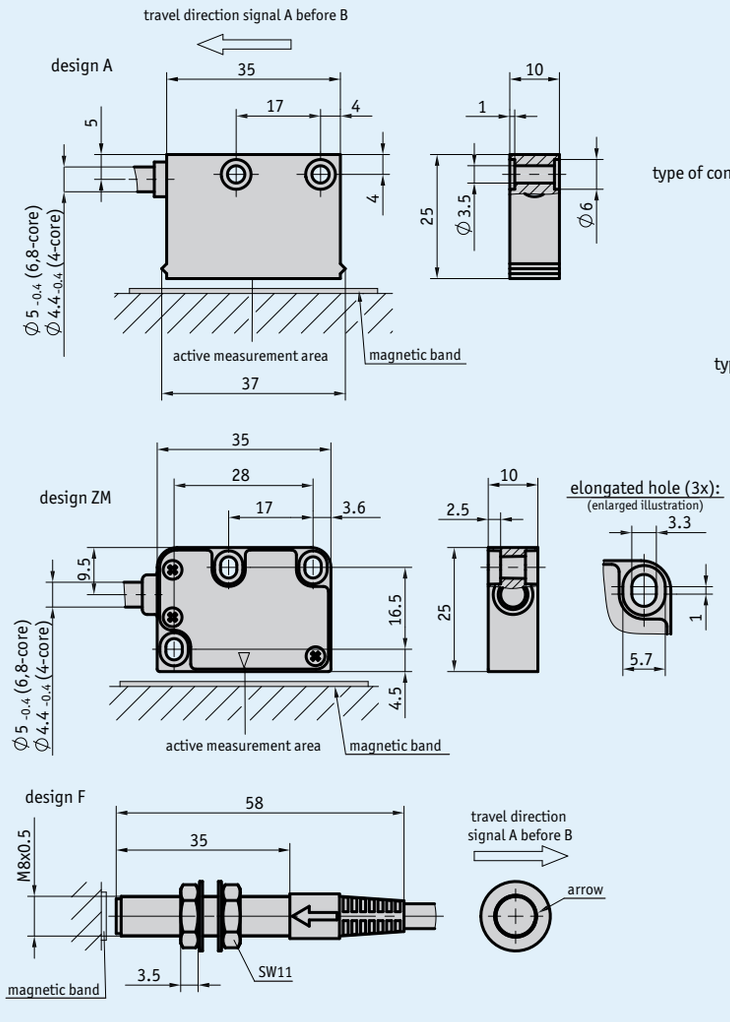

Mechanical data

Feature	Technical data	Additional information
Housing	red plastic	A design
	steel	F design
	zinc die-cast	ZM design
Sensor/ring reading distance	0.1 ... 2 mm	0, I reference signals
	0.1 ... 1 mm	R reference signal
Cable sheath	PUR suitable for drag-chain use	4-wire ø4.4$_{-0.4}$ mm; 5, 6, 8-wire ø5$_{-0.4}$ mm

Electrical data

Feature	Technical data	Additional information
Operating voltage	24 V DC ±20 %	reverse polarity protected
	5 V DC ±5 %	no reverse polarity protection
Current consumption	<20 mA	at 24 V DC, unloaded
	<75 mA	loaded
Output circuit	PP, LD (RS422), TTL	PP only at 24 V
Output signals	A, A/, B, B/, I, I/, R, R/	quadrature signal
Output signal level high	>UB - 2.5 V	PP
	>2.5 V	LD
	>2.4 V	TTL
Output signal level low	<0.8 V	PP
	<0.5 V	LD
	<0.4 V	TTL
Jitter	<15 %	0.5 mm reading distance
Pulse width of reference signal	1 increment(s)	
Real-time requirement	speed-proportional signal output	
Type of connection	open cable end	
	plug connector	7/8-pole
	D-Sub	9-pole

Signal pattern

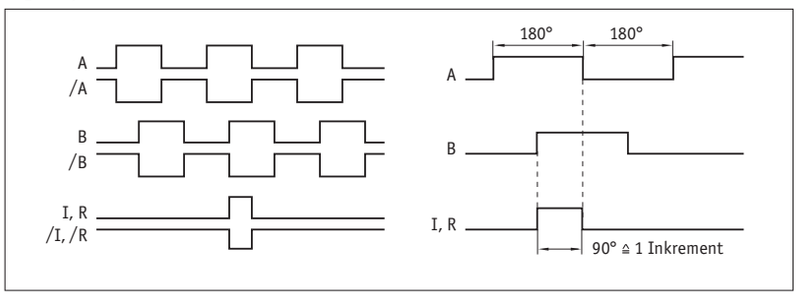

The logical condition of signals A and B is not defined in reference to the index signal I or the reference signal R. It can deviate from the signal form.

System data

Feature	Technical data	Additional information
Scaling factor	1, 4, 5, 8, 10, 16, 20, 64	
System accuracy	±0.1°	
Repeat accuracy	±1 increment(s)	at T_U = 20 °C
Measuring range	∞	
Circumferential speed	≤25 m/s	≤3.2 m/s referencing speed

Ambient conditions

Feature	Technical data	Additional information
Ambient temperature	-10 ... 70 °C	
Storage temperature	-30 ... 80 °C	
Relative humidity	100 %	condensation admissible
EMC	EN 61000-6-2	interference resistance / immission
	EN 61000-6-4	emitted interference / emission
Protection category	IP67	EN 60529
Shock resistance	500 m/s^2, 11 ms	EN 60068-2-27
Vibration resistance	100 m/s^2, 5 ... 150 Hz	EN 60068-2-6

Magnetic sensor MSK320 rotativ
Compact sensor, incremental, digital interface, scaling factor 64

Pin assignment

- **Not inverted without reference signal**

Signal	E1	E6X	E8X
GND	black	1	1
+UB	brown	2	2
A	red	3	3
B	orange	4	4
nc		5	5
nc		6	6
nc		7	7
nc			8
nc			9

- **Inverted with reference signal**

Signal	E1	E6X	E8X
A	red	1	1
B	orange	2	2
I	blue	3	3
+UB	brown	4	4
GND	black	5	5
A/	yellow	6	6
B/	green	7	7
I/	violet	8	8
nc			9

- **Inverted without reference signal**

Signal	E1	E6X	E8X
A	red	1	1
B	orange	2	2
nc		3	3
+UB	brown	4	4
GND	black	5	5
A/	yellow	6	6
B/	green	7	7
nc			8
nc			9

Hint for mounting

For systems with reference points on the magnetic ring take care that sensor and ring are aligned correctly (see picture)

Reference signal	O, I	R
A, Sensor/ring reading distance	≤2 mm	≤1.0 mm
B, Lateral offset	±2 mm	±0.5 mm
C, Alignment error	±3°	±3°
D, Longitudinal inclination	±1°	±1°
E, Lateral inclination	±3°	±3°

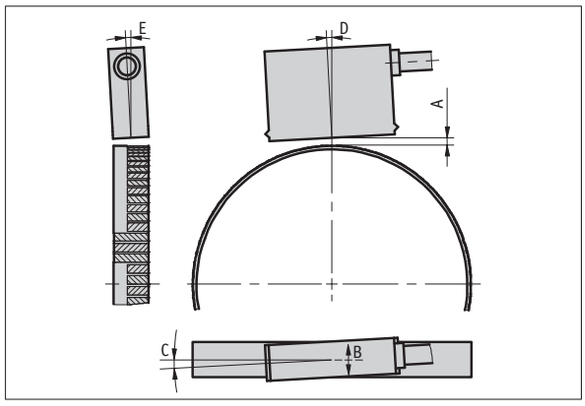

(symbolic sensor representation)

Order

Ordering information

one or more system components are required:

Magnetic ring MR320	page 150
Magnetic band ring MBR320	page 160
Magnetic ring MRI01	page 154

Ordering table

Feature	Ordering data		Specification	Additional information
Operating voltage	4	A	24 V DC ±20 %	reverse polarity protected
	5		5 V DC ±5 %	
Design	A	B	rectangular	
	ZM		metal housing without status LEDs	
	F		round	only with NI output signal, O reference signal and scaling factor 8
Type of connection	E1	C	open cable end	
	E6X		bullet connector without mating connector	
	E8X		D-SUB 9-pole without mating connector	
			extension cables on request	
Cable length L	...	D	1.0 ... 20 m, in steps of 1 m	
			others on request	
Output circuit	PP	E	push-pull	only operating voltage 4
	LD		Line-Driver	
	TTL			only with non-inverted output signal, ≤ 5 m cable length
Output signal	NI	F	not inverted	
	I		inverted	only with A or ZM design and I or R reference signal
Reference signal	0	G	without	
	I		periodic index	only with A or ZM design, index signal every 3.2 mm
	R		fixed reference	only with A or ZM design, not with scaling factor 1
Scaling factor	...	H	1, 4, 5, 8, 10, 16, 20, 64	
			others on request	

Order key

MSK320 rotativ - [A] - [B] - [C] - [D] - [E] - [F] - [G] - [H]

Scope of delivery: *Fastening set, Mounting instructions, MSK320 rotativ*

Additional information:

Quick start, technical details *page 146*
Product overview *page 6*

subject to technical alteration • 2015/10/09 • 10:25 • K

Magnetic sensor MSK5000 rotativ
Compact sensor, incremental, digital interface, scaling factor 1250

Profile

- Repeat accuracy of ±1 increment
- Status LED display
- Works with MR500 magnetic ring, MBR500 magnetic tape ring
- Reading distance ≤2 mm
- Max. 200000 pulses/revolution in combination with MR500 and MBR500 (160 poles)

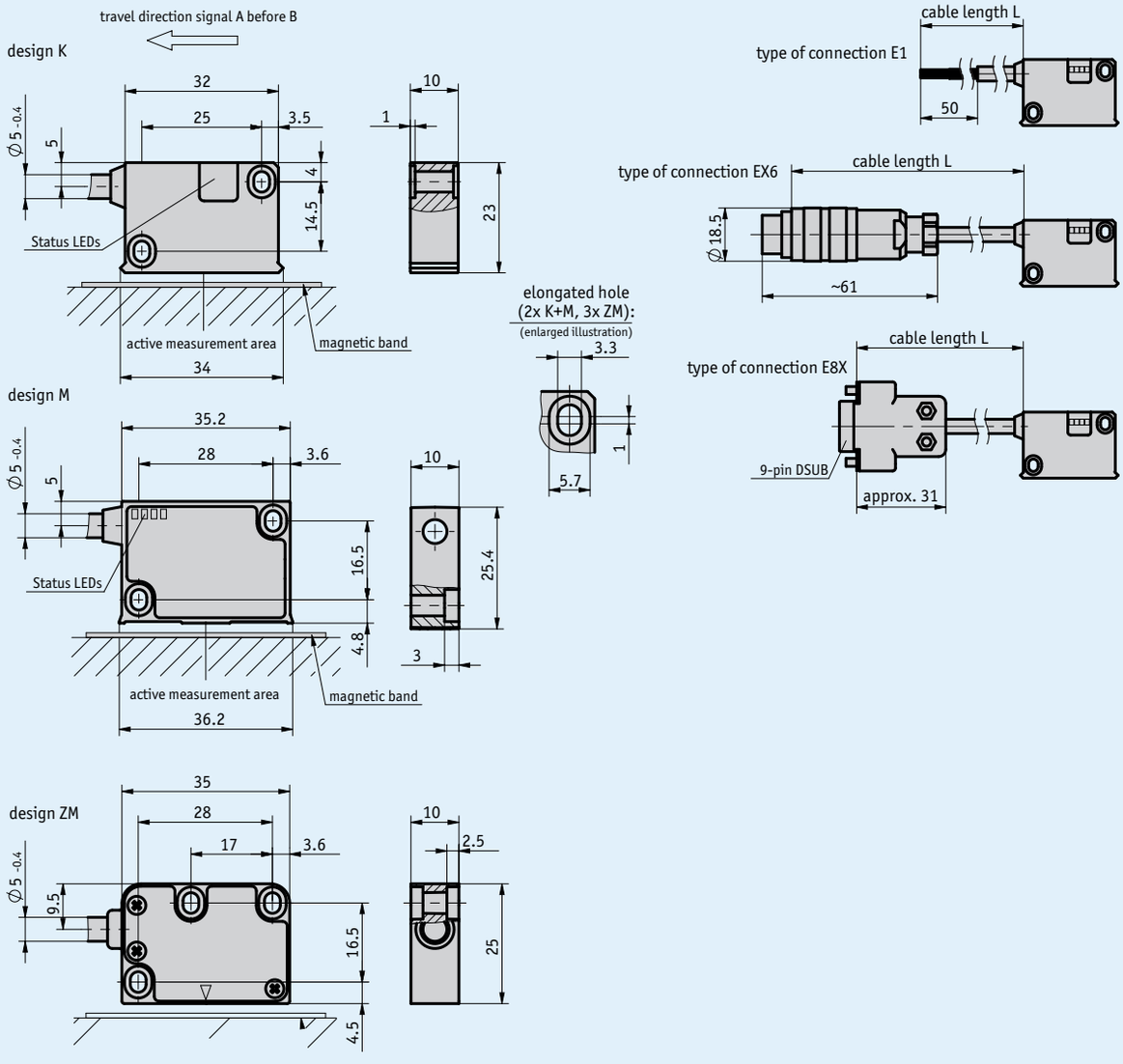

Mechanical data

Feature	Technical data	Additional information
Housing	synthetic material ABS black	K design
	zinc die-cast/aluminum	M design, aluminum front cover
	zinc die-cast	ZM design
Sensor/ring reading distance	0.1 ... 2 mm	O, I reference signals
	0.1 ... 1.5 mm	R reference signal
Cable sheath	PUR, suitable for drag-chain use	6, 8-wire ø$5_{-0.4}$ mm

Peripheral speed

		Peripheral speed Vmax [m/s]									
Scaling factor	**1250**	4.00	3.20	1.60	0.80	0.32	0.20	0.10	0.05	0.03	0.01
	250	20.00	16.00	8.00	4.00	1.60	1.00	0.50	0.25	0.13	0.06
	125	25.00	25.00	16.00	8.00	3.20	2.00	1.00	0.50	0.25	0.12
	50	25.00	25.00	25.00	20.00	8.00	5.00	2.50	1.25	0.63	0.30
	25	25.00	25.00	25.00	25.00	16.00	10.00	5.00	2.50	1.25	0.61
	12.5	25.00	25.00	25.00	25.00	25.00	20.00	10.00	5.00	2.50	1.21
Pulse interval [µs]		0.20	0.25	0.50	1.00	2.50	4.00	8.00	16.00	32.00	66.00
Counting frequency [kHz]		1250.00	1000.00	500.00	250.00	100.00	62.50	31.25	15.63	7.81	3.79

Electrical data

Feature	Technical data	Additional information
Operating voltage	6.5 ... 30 V DC	reverse polarity protected
	4.75 ... 6 V DC	without reverse polarity protection
Current consumption	<25 mA	at 24 V DC, unloaded
	<75 mA	loaded
Output circuit	PP, LD (RS422)	
Output signals	A, /A, B, /B, I, /I bzw. R, /R	
Output signal level high	>UB - 2.5 V	PP
	>2.5 V	LD
Output signal level low	<0.8 V	
Pulse width of reference signal	1 or 4 increment(s)	
Real-time requirement	speed-proportional signal output	
Type of connection	open cable end	
	plug connector	7/8-pole
	D-Sub	9-pole

Signal pattern

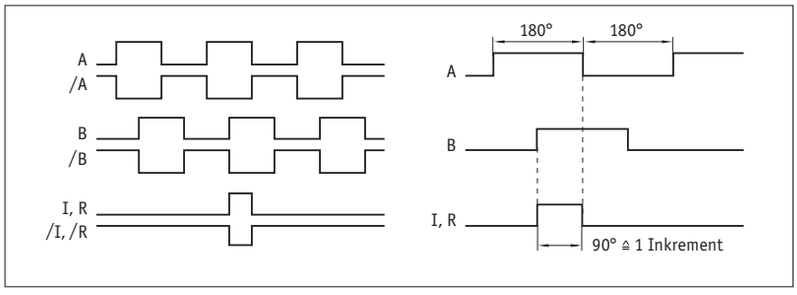

The logical condition of signals A and B is not defined in reference to the index signal I or the reference signal R. It can deviate from the signal form.

Reference or index signal with 4 increments (360°) signal length is only valid from the 5th counting step onwards. A corresponding delay should be taken into consideration after switching on the operating voltage.

Pulse interval

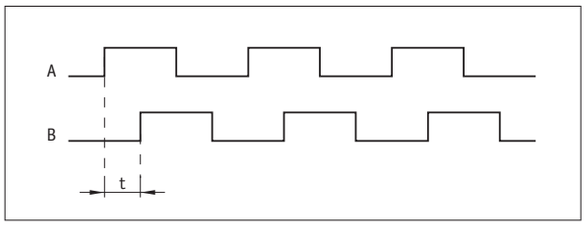

Example: Pulse interval t = 1 µs
(i. e., the downstream unit must be able to process 250 kHz)

Formula for counting frequency = $\frac{1}{1\ \mu s \times 4}$ = 250 kHz

System data

Feature	Technical data	Additional information
Scaling factor	12.5, 25, 50, 125, 250, 1250	
System accuracy	±0.1°	
Repeat accuracy	±10 µm	
Measuring range	∞	
Circumferential speed	depending on scaling factor and pulse interval	see table

Ambient conditions

Feature	Technical data	Additional information
Ambient temperature	-10 ... 70 °C	
Storage temperature	-30 ... 80 °C	
Relative humidity	100 %	condensation admissible
EMC	EN 61000-6-2	interference resistance / immission
	EN 61000-6-4	emitted interference / emission
Protection category	IP67	EN 60529
Shock resistance	500 m/s^2, 11 ms	EN 60068-2-27
Vibration resistance	100 m/s^2, 5 ... 150 Hz	EN 60068-2-6

Pin assignment

Inverted without reference signal

Signal	E1	E6X	E8X
A	red	1	1
B	orange	2	2
nc		3	3
+UB	brown	4	4
GND	black	5	5
/A	yellow	6	6
/B	green	7	7
nc			8
nc			9

Inverted with reference signal

Signal	E1	E6X	E8X
A	red	1	1
B	orange	2	2
I,R	blue	3	3
+UB	brown	4	4
GND	black	5	5
/A	yellow	6	6
/B	green	7	7
/I, /R	violet	8	8
nc			9

Hint for mounting

For systems with reference points on the magnetic ring please take care that sensor and ring are aligned correctly (see picture).

Reference signal	O, I	R
A, Sensor/ring reading distance	≤2 mm	≤1.5 mm
B, Lateral offset	±2 mm	±0.5 mm
C, Alignment error	±3°	±3°
D, Longitudinal inclination	±1°	±1°
E, Lateral inclination	±3°	±3°

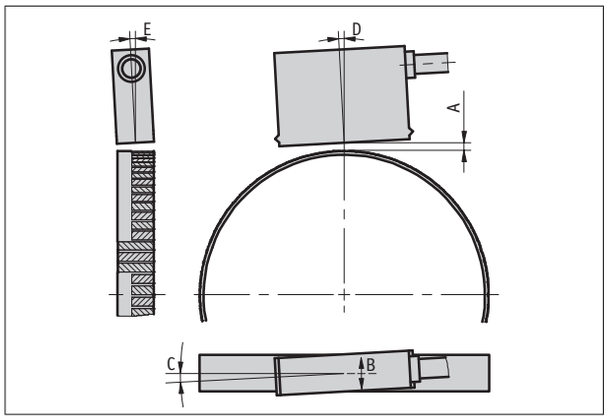

(symbolic sensor representation)

Magnetic sensor MSK5000 rotativ
Compact sensor, incremental, digital interface, scaling factor 1250

Order

Ordering information

one or more system components are required:

Magnetic ring MR500	page 152
Magnetic band ring MBR500	page 162

Ordering table

Feature	Ordering data		Specification	Additional information
Operating voltage	10	A	6.5 ... 30 V DC	
	11		4.75 ... 6 V DC	
Design	K	B	plastic housing	
	M		metal housing with status LEDs	
	ZM		metal housing without status LEDs	
Type of connection	E1	C	open cable end	
	E6X		bullet connector without mating connector	
	E8X		D-SUB 9-pin without mating connector	
			extension cables on request	
Cable length	...	D	01.0 ... 20 m, in steps of 1 m	
			others on request	
Output circuit	PP	E	push-pull	
	LD		Line Driver	
Reference signal	0	F	without	
	I		periodic index	index signal every 5 mm
	R		fixed reference	
Scaling factor	...	G	12.5, 25, 50, 125, 250, 1250	
			others on request	
Pulse interval	...	H	0.2, 0.25, 0.5, 1.00, 2.5, 4, 8, 16, 32, 66	

Order key

MSK5000 rotativ - [A] - [B] - [C] - [D] - [E] - [F] - [G] - [H]

Scope of delivery: *MSK5000 rotativ, Mounting instructions, Sensor fastening set*

Additional information:

Quick start, technical details *page 146*
Product overview *page 6*

subject to technical alteration • 2015/10/09 • 10:25 • K

5.5

5.0 | Overview 3
5.1 | MagLine Micro 15
5.2 | MagLine Basic 49
5.3 | MagLine Macro 125
5.4 | MagLine Roto 145

5.5 | Accessories

Products	Profile Rail PS1	184
	Profile Rail PS	185
	Protective band SB	186
	Profile Rail PSA	187
	Mating Connector Overview	188
	Cable extension KV12S0	190
	Cable extension KV12S2	192

5.6 | Appendix 195
5.7 | Product index, contact information 203

Profile Rail PS1
Accessories

Profile

- Aluminum cover for mechanical protection of magnetic tapes with widths up to 10 mm (except MB100/1, MBA110 and MBA111)
- Easy mounting owing to the V-notch for drilling holes

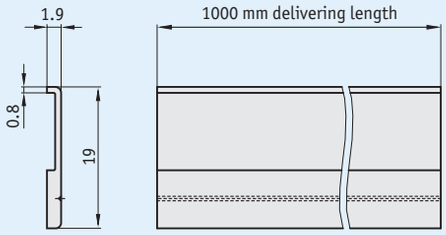

Mechanical data

Feature	Technical data	Additional information
Material	Aluminum	

Order

- **Order key**

PS1 - **1.00**

Scope of delivery: *PS1*

subject to technical alteration • 2015/10/09 • 10:25 • K

Profile

- Robust mounting unit for magnetic bands with 10 mm width
- No adhesive joints
- Perfect support for magnetic bands
- Extensible plug-in modules
- Easy mounting

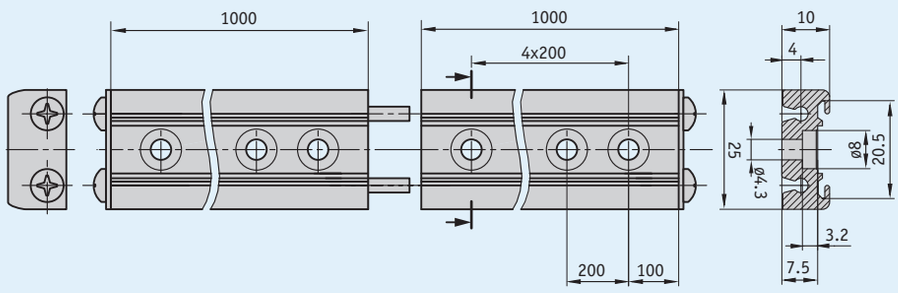

Mechanical data

Feature	Technical data	Additional information
Material	Aluminum	

5.5

Order

Ordering table

Feature	Ordering data		Specification	Additional information
Length	01.0	A	1 m	
	...		00.3 ... 10.0 m, in intervals of 0.1 m	

Order key

PS - [ ]
A

Scope of delivery: *PS, Mounting instructions, coupling pins, closing panel*

Accessories:
Protective band SB *page 186*

subject to technical alteration • 2015/10/09 • 10:25 • K

Protective band SB
Accessories

Profile

- Easy mounting
- For sliding into profile rail PS
- No adhesive joints

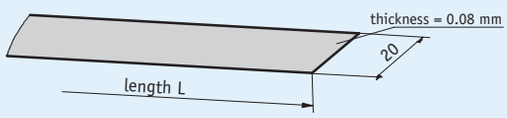

Mechanical data

Feature	Technical data	Additional information
Material	Stainless steel	

5.5

Order

- **Ordering table**

Feature	Ordering data		Specification	Additional information
Length	001.0	A	1 m	
	...	A	000.200 ... 010.0 m, in intervals of 0.1 m	

- **Order key**

SB - 20 - [ ] - ohne
A

Scope of delivery: SB

subject to technical alteration • 2015/10/09 • 10:25 • K

Profile

- Robust mounting unit for magnetic bands with 20 mm width
- Extensible via plug-in modules
- Easy mounting

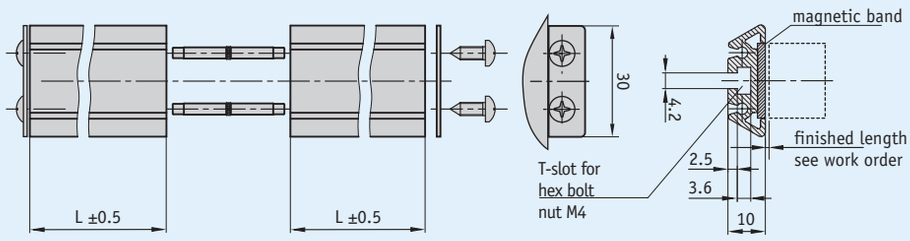

Mechanical data

Feature	Technical data	Additional information
Material	Aluminum	

5.5

Order

Ordering table

Feature	Ordering data		Specification	Additional information
Length	0.5	A	0.5 m	
	...		0.2 ... 3.0 m, in intervals of 0.1 m	

Order key

PSA - [ ]
A

Scope of delivery: *PSA*

subject to technical alteration • 2015/10/09 • 10:25 • K

Mating Connector Overview
Accessories

Profile

- Mating connector, straight
- Mating connector, offset
- D-SUB connector
- Bus terminator, straight

When screwed, the distance to the device will increase by approx. 3 mm.

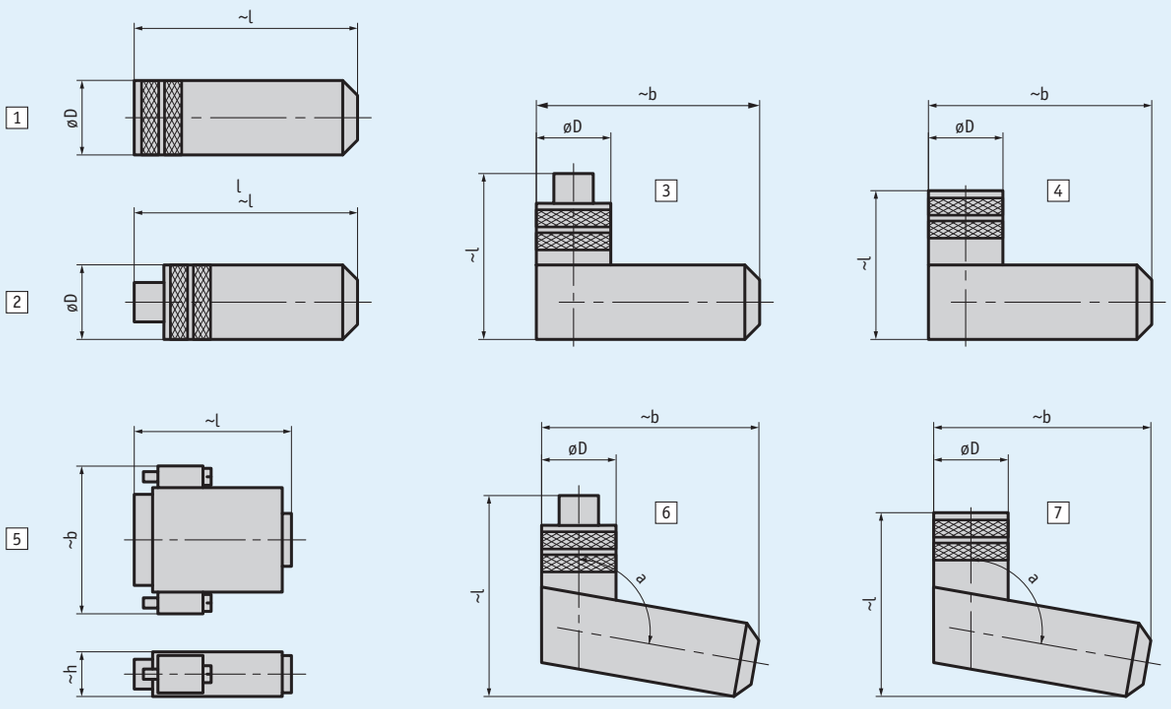

Order

Overview of orders

Order key	Picture	Type	PIN	Name	ø Cable	øD	l	b	h	a
71364+71365	5	D-SUB	9	pin+shell	≤8.5		35	31	15.5	
71366+71365	5	D-SUB	9	socket+shell	≤8.5		35	31	15.5	
73947+73946	5	D-SUB	15	socket+shel	≤8.5		42	40	15.2	
76141	1	M16	7	socket	4 ... 6	18.5	61			
76572	1	M16	12	socket	6 ... 8	18.5	62			
77087	1	M16	7	socket	6 ... 8	18.5	62			
78088	4	M16	7	angle socket	4 ... 6	20	38	54		
79665	4	M16	7	angle socket	6 ... 8	20	38	54		
79666	4	M16	12	angle socket	6 ... 8	20	38	54		
81351	1	M9	8	socket	3.5 ... 5	14	38			
81363	4	M16	3	angle socket	4 ... 6	20	38	54		
81487	1	M9	3	socket	3.5 ... 5	14	38			
81935	1	M23	12	socket	≤8.5	26	51.1			
82182	1	M16	3	socket	4 ... 6	18.5	61			
82247	4	M9	4	angle socket	3.5 ... 5	14	30	30.5		
82366	4	M9	3	angle socket	3.5 ... 5	14	30	30.5		
82804	7	M12 B-Cod.	5	angle socket	4 ... 8	19	48	41		100°
82805	6	M12 B-Cod.	5	angular pin	4 ... 8	19	50	41		100°
82815	2	M12 A-Cod.	5	bus terminating plug (CAN)		14.5	55			
82816	2	M12 B-Cod.	5	bus terminating plug (PB)		14.2	44			
83006	7	M12 A-Cod.	5	angle socket	4 ... 8	19	48	41		100°
83007	6	M12 A-Cod.	5	angular pin	4 ... 8	19	50	41		100°
83091	7	M12 A-Cod.	4	angle socket	4 ... 8	19	48	41		100°
83419	1	M12 A-Cod.	4	socket	4 ... 6	20	54			
83447	1	M9	4	socket	3.5 ... 5	14	38			
83525	1	M12 A-Cod.	8	socket	6 ... 8	20	57			
83526	1	M12 A-Cod.	4	socket	6 ... 8	20	57			
83527	2	M12 A-Cod.	8	pin	6 ... 8	20	62			
83991	1	M12 B-Cod.	5	socket	6 ... 8	20	57			
83992	2	M12 B-Cod.	5	pin	6 ... 8	20	62			
84109	1	M12 A-Cod.	5	socket	6 ... 8	20	57			
84209	1	M8	4	socket	3.5 ... 5	12	43			
84210	2	M8	4	pin	3.5 ... 5	12	50			
84732	2	M12 A-Cod.	5	pin	6 ... 8	20	62			
85057	1	M16	3	socket	6 ... 8	18.5	62			
85058	4	M16	3	angle socket	6 ... 8	20	38	54		
85277	1	M12 A-Cod.	12	socket	6 ... 8	20	57			
85278	4	M12 A-Cod.	12	angle socket	6 ... 8	20	38	54		
87599	7	M12 A-Cod.	8	angle socket	4 ... 8	19	48	41		100°
87600	3	M12 D-Cod.	4	angular pin	6 ... 8	20	42	54		
87601	2	M12 D-Cod.	4	pin	6 ... 8	20	63			
BAS-0005	2	M8	4	bus terminating plug		12	45			

Order key

...

Scope of delivery: *mating connector*

subject to technical alteration • 2015/10/09 • 10:25 • K

Cable extension KV12S0
Accessories

Profile

- Ready-to-use cable connection
- Cable lengths up to 20 m
- Connection technology M16, 12-pole

Voltage drop should be envisaged with increasing cable length. This should be taken into account for the electrical design.

type of connection GE

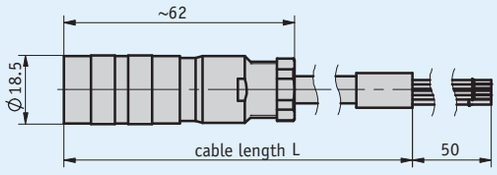

type of connection W

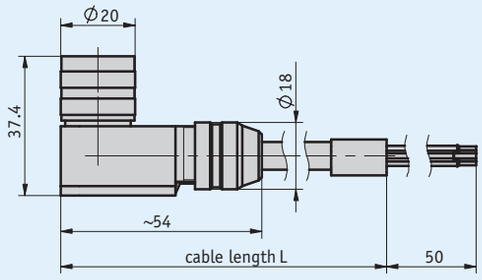

5.5

Mechanical data

Feature	Technical data	Additional information
Cable sheath	PUR	12x 0.25 mm^2, ø7.3 mm

Ambient conditions

Feature	Technical data	Additional information
Ambient temperature	-5 ... 50 °C	

Pin assignment

KV12S0

Cable color	PIN
blue	A
violet	B
green	C
red	D
yellow	E
pink	F

Cable color	PIN
red-blue	G
white	H
gray-pink	J
gray	K
black	L
brown	M

Order

Ordering table

Feature	Ordering data		Specification	Additional information
Type of connection	GE	A	straight connector	
	W		right angle plug	
Cable length	...	B	01.0 ... 20.0 m, in steps of 1 m	

Order key

KV12S0 - [ ] - [ ]
A B

Scope of delivery: KV12S0

subject to technical alteration • 2015/10/09 • 10:25 • K

Cable extension KV12S2
Accessories

Profile

- Ready-to-use cable connection
- Cable lengths up to 20 m

Voltage drop should be envisaged with increasing cable length. This should be taken into account for the electrical design.

type of connection GE

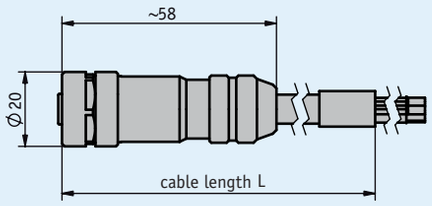

Mechanical data

Feature	Technical data	Additional information
Cable sheath	PUR	12x 0.25 mm^2, ø7.3 mm

Ambient conditions

Feature	Technical data	Additional information
Ambient temperature	-30 ... 80 °C	

Pin assignment

KV12S2

Cable color	PIN
violet	1
pink	2
blue	3
black	4
white-red	5
yellow	6

Cable color	PIN
gray	7
brown	8
green	9
white	10
red	11
white-green	12

Order

Ordering table

Feature	Ordering data	Specification	Additional information
	... A	01.0 ... 20.0 m, in intervals of 1 m	

Order key

KV12S2 - GE - [ ]
A

Scope of delivery: KV12S2

subject to technical alteration • 2015/10/09 • 10:25 • K

5.6

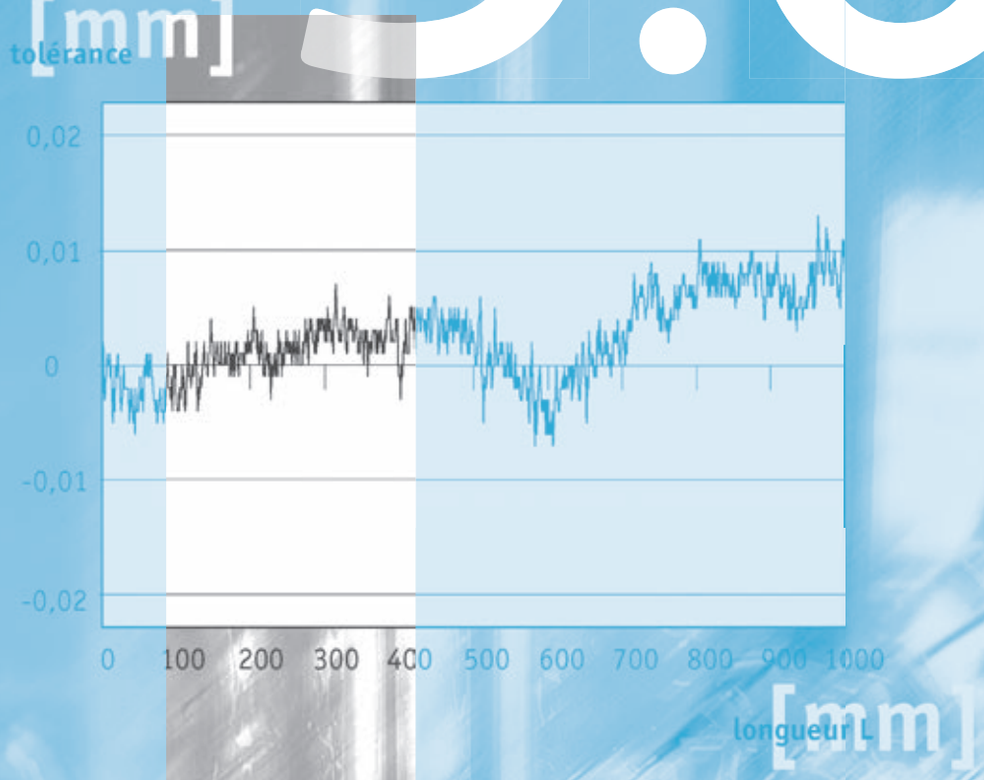
[mm]
tolérance
0,02
0,01
0
-0,01
-0,02
0
100
200
300
400
500
600
700
800
900
1000
longueur L
[mm]

5.0 | Overview 3
5.1 | MagLine Micro 15
5.2 | MagLine Basic 49
5.3 | MagLine Macro 125
5.4 | MagLine Roto 145
5.5 | Accessories 183

5.6 | Appendix

sensor/tape signal curves 196
Specification of magnetic tapes 197
Resolution, pulse interval, travel speed, counting frequency 198
Specification of sensor output signals 199
Overview of IP protection classes 200

5.7 | Product index, contact information 203

Accuracy comparison (MB100/1, MB500/1)

The diagrams opposite show typical measurement curves. Measurement is based on combinations of magnetic band and the corresponding sensor.

Picture 1 (MagLine Micro)
- MB100/1 (10 µ)
- MSK1000
- Increment 1.1 mm, measuring length 1000 mm

Picture 2 (MagLine Micro)
- MB100/1 (50 µ)
- MSK1000
- Increment 1.1 mm, measuring length 1000 mm

Picture 3 (MagLine Basic)
- MB500/1 (100 µ)
- MSK5000
- Increment 5.1 mm, measuring length 1900 mm

Pict. 1

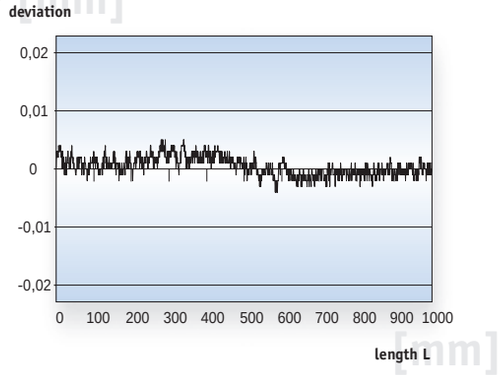

Pict. 2

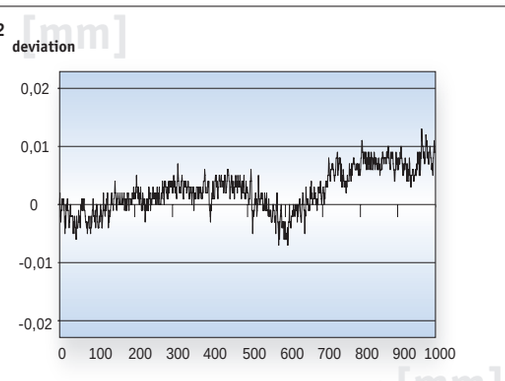

Pict. 3

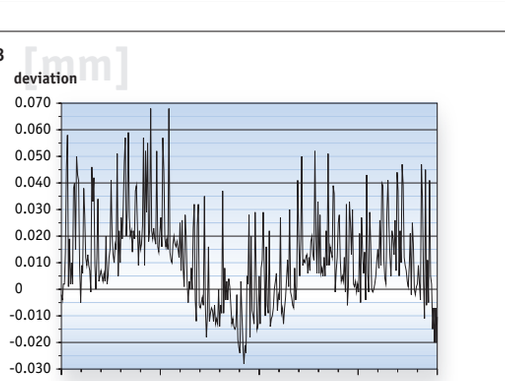

5.6

Technical data

Mechanical data		
Dimensions	see data sheets	MB100/1, MB200/1, MB320/1, MB400, MB500/1, MB2000, MBA, MBA511, MBA111, MB4000
Bend radius	>50 mm	
Available length	≤100 m	

Band/strip materials		
Carrier strip	spring steel	
	VA (stainless steel strip)	
Magnet material	plastic-bonded ferrite	
Cover strip	stainless steel	

Environmental conditions		
Operating temperature	-40 ... + 80 °C	option: -40 ... +120 °C
Storage temperature	-40 ... + 80 °C	

Resistance to chemicals, dirt, and liquids (qualitative allocation)

high	**medium**	**low** (can be enhanced by additional protective measures)
water/water vapor	acetone	xylol/toluol
formic acid	stearic acid 70 °C, anhydrous	trichlorethylene
formaldehyde, 40 %,	oleic acid	tetrahydrofuran
glycerin 98 °C	diisopropyl ether	tetrachloromethane
N-hexane	acetic acid	turpentine
iso-octane	benzine	nitric acid
lactic acid	kerosene	nitrobenzene
mineral oil	ammonia	lacquer solvent
linseed oil	acetylene	benzene
cotton seed oil	seawater	aromatic hydrocarbons
plant oils		ketones
wood dust/chips		anorganic acids (HCL, H_2SO_4)
stone dust		drilling emulsions
metal dust/chips		

Field strength (typical values, measured on the band surface with hall-effect probe)		
MB100/1	30 kA/m	
MB200/1	28 kA/m	
MB320/1	40 kA/m	
MB400	38 kA/m	
MB500/1	36 kA/m	

Accuracy data		
	Accuracy classes	
MB100/1	10 µm	
	50 µm	
MB200/1	50 µm	
MB320/1	100 µm	
MB400	1 mm	
MB500/1	50 µm	
	100 µm	
MB2000	1 mm	
MB4000	1 mm	
MBA111	10 µm	
MBA	50 µm	
MBA501	50 µm	
MBA511	100 µm	

	Expansion coefficients	
	spring steel	11 µm/K
	VA carrier	16 µm/K

Relation between resolutions and pulse interval

The resolution and pulse interval parameters can be selected on the sensors of MSK range. The interfaces of these sensors supply digital output signals (counting pulses), which can be processed in a higher-level controller with a counter input.

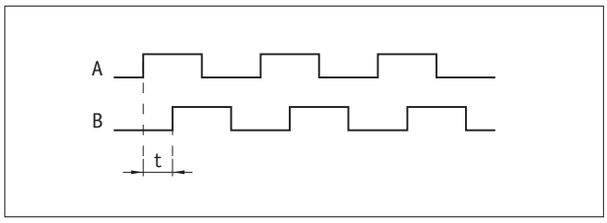

Definition: Pulse interval
The pulse interval "t" is the smallest period of time between two edges which can occur during sensor motion. Micro-vibrations can also act as triggers.

The calculation formula

Resolution and pulse intervals must be coordinated with the maximum possible counting frequency of the controller. With the **maximum travel speed** of the system, the **counting frequency** of the follow-up electronic system can be determined with the gray highlighted formulas. An example calculation with these formulas is shown below.

$$\text{Pulse interval} = \frac{\text{resolution}}{\text{max. travel speed}} \times 0.8$$

$$\text{Counting frequency} = \frac{1}{\text{pulse interval} \times 4}$$

Calculation example
A path should be measured with a resolution of 0.025 mm. The maximum traversing speed is 15 m/s; the pulse interval and counting frequency must be determined. The values for these calculation examples are shown in the table below (highlighted in blue).

1. Determining the pulse interval:
The next lower, programmable value is selected, in this case **1 µs.**

$$\text{Pulse interval} = \frac{0.025\ \text{mm}}{15\ \text{m/s}} \times 0.8 = 1.33\ \mu\text{s}$$

2. Determining the counting frequency of the follow-up electronic system:
The downstream electronics unit must be able to recognize a frequency of **250 kHz** at the input.

$$\text{Counting frequency} = \frac{1}{1\ \mu\text{s} \times 4} = 250\ \text{kHz}$$

Table for MSK5000 (example)

Resolution [mm]	**Travel speed** V_{max} [m/s]								
0.001	0.01	0.03	0.05	0.10	0.20	0.32	0.80	1.60	4.00
0.005	0.06	0.13	0.25	0.50	1.00	1.60	4.00	8.00	20.00
0.010	0.12	0.25	0.50	1.00	2.00	3.20	8.00	16.00	25.00
0.025	0.30	0.63	1.25	2.50	5.00	8.00	20.00	25.00	25.00
0.050	0.61	1.25	2.50	5.00	10.00	16.00	25.00	25.00	25.00
0.100	1.21	2.50	5.00	10.00	20.00	25.00	25.00	25.00	25.00
Pulse interval [µs]	66.00	32.00	16.00	8.00	4.00	2.50	1.00	0.50	0.20
Counting frequency [kHz]	3.79	7.81	15.63	31.25	62.50	100.00	250.00	500.00	1250.00

Sensors MSK

Design rectangular

Output circuit	PP	LD	TTL
Output signals	**A, B, I reverse-plaity protection**	**A, B, I inverted**	**A, B**
Load resistance	**—**	**120 Ohm***	**—**
Operating voltage	**24 V**	**5 V and 24 V**	**5 V and 24 V**
U_{High}	>UB - 1.5 V	RS422 spez.	>3.4 V
U_{Low}	<1 V	RS422 spez.	<0.4 V
I_{max} (each channel)	<25 mA	RS422 spez.	<5 mA

* MSK2000, MSK4000: 470 Ohm

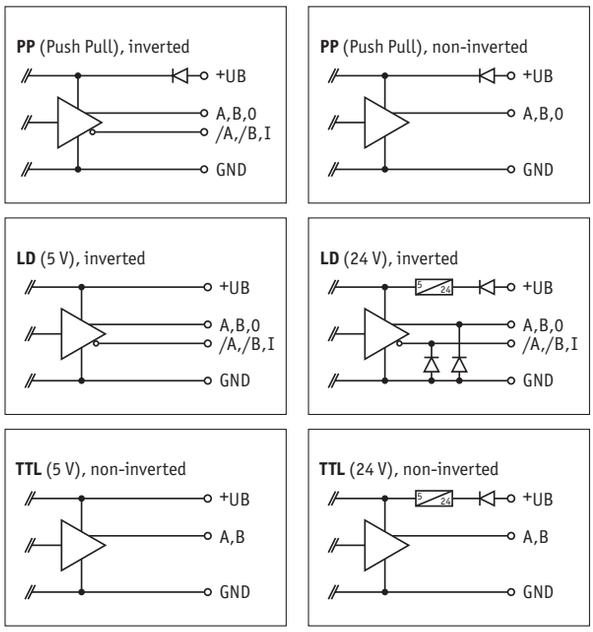

Design round MSK320

Output circuit	PP
Output signals	**A, B, I reverse-plaity protection**
Operating voltage	**24 V**
U_{High}	>UB - 2.5 V
U_{Low}	<2.5 V
I_{max} (each channel)	<5 mA

Sensors LE and LS

Signal differential 1 V_{ss} ±10 %

	5 V	24 V
Referece voltage	UB/2 ±200 mV	2.5 V ±200 mV
Temperatur	bei 20 °C	bei 20 °C

5.6

Protection classes according to DIN EN 60529

IP . .

	Touch and foreign bodies protection
	0 No protection.
	1 Protected against access with the back of the hand. Protection against solid foreign bodies with Ø > 50 mm.
	2 Protected against contact with a finger. Protected against solid foreign bodies with diameters > 12.5 mm.
	3 Protected against access with a tool. Protected against solid foreign bodies with diameters > 2.5 mm.
	4 Protected against access with a wire. Protected against solid foreign bodies with diameters > 1.0 mm.
	5 Full protection against contact. Protection against harmful quantities of dust.
	6 Full protection against contact. Dust-proof.

	Water protection
	0 No protection.
	1 Protection against vertical water drips.
	2 Protection against vertical water drips if the housing is tilted up to ±15°.
	3 Protection against spray up to ±60° towards verticality.
	4 Protection against splash water coming from any angle.
	5 Protection against hose water (nozzle) coming from any angle.
	6 Protection against strong hose water coming from any angle .
	7 Protection against temporary immersion.
	8 Protection against continuous immersion.
	9k* Protection against ingress of water during high pressure or steam-jet cleaning, specific for road vehicles.

The standards deal with the protection of electric equipment by means of housings, covers and so forth. For purely mechanical devices, the information is used figuratively.

The two numbers are not indicative of the protection against ingress of oils or similar liquids. The second figure indicates the protection class exclusively for water.

* IPx9k is not part of DIN EN 60 529, rather it is contained in DIN 40 050

5.7

5.0 | Overview 3
5.1 | MagLine Micro 15
5.2 | MagLine Basic 49
5.3 | MagLine Macro 125
5.4 | MagLine Roto 145
5.5 | Accessories 183
5.6 | Appendix 195

5.7 | Product index, contact information

Product index 204
contact information 205

MA508/1

MSK320

device	type	page
A		
AS510/1	Translation module	80
ASA110H	Translation module	43
ASA510H	Translation module	120
K		
KV12S0	Cable extension	190
KV12S2	Cable extension	192
L		
LE100/1 linear	Magnetic sensor	24
LE100/1 rotativ	Magnetic sensor	164
LS100	Magnetic sensor	28
M		
MA100/2	Electronic display	33
MA502	Electronic display	75
MA503/2	Electronic display	105
MA503WL	Electronic display	111
MA504/1	Electronic display	107
MA505	Electronic display	97
MA506	Electronic display	78
MA508/1	Electronic display	102
MA508SG	Electronic display	117
MA561	Electronic display	100
Mating Connector Overview		188
MB100/1	Magnetic band	18
MB200/1	Magnetic band	54
MB2000	Magnetic band	130
MB320/1	Magnetic band	56
MB400	Magnetic band	128
MB4000	Magnetic band	132
MB500/1	Magnetic band	58
MBA	Magnetic band	82
MBA110	Magnetic band	36
MBA111	Magnetic band	38
MBA501	Magnetic band	84
MBA511	Magnetic band	86

device	type	page
MBR100	Magnetic band ring	156
MBR200	Magnetic band ring	158
MBR320	Magnetic band ring	160
MBR500	Magnetic band ring	162
MR200	Magnetic ring	148
MR320	Magnetic ring	150
MR500	Magnetic ring	152
MRI01	Magnetic ring	154
MS100/1	Magnetic sensor	31
MS500	Magnetic sensor	72
MS500H ML	Magnetic sensor	109
MSA	Magnetic sensor	88
MSA111C	Magnetic sensor	40
MSA501	Magnetic sensor	91
MSA511	Magnetic sensor	94
MSK1000	Magnetic sensor	20
MSK2000	Magnetic sensor	137
MSK210 linear	Magnetic sensor	60
MSK210 rotativ	Magnetic sensor	168
MSK320 linear	Magnetic sensor	64
MSK320 rotativ	Magnetic sensor	172
MSK400/1	Magnetic sensor	134
MSK4000	Magnetic sensor	140
MSK5000 linear	Magnetic sensor	68
MSK5000 rotativ	Magnetic sensor	176
P		
PS	Profile Rail	185
PS1	Profile Rail	184
PSA	Profile Rail	187
R		
RTX500	Radio transmitter/receiver	114
S		
SB	Protective band	186

MBA

LE100/1

Do you want to contact an agency near you?

Visit or website **www.siko-global.com**, and go to the „Contact“ menu item to access all the latest contact data of our agencies.

Africa
Egypt
South Africa

Asia
China
India
Indonesia
Iraq
Iran
Israel
Japan
Malaysia
Singapur
South Korea
Taiwan
Thailand
United Arab Emirates
Vietnam

Australia
Australia
New Zealand

Europe
Austria
Belarus
Belgium
Bulgaria
Croatia
Czech Republic
Denmark
Estonia
Finland
France
Germany
Great Britain
Greece
Hungary
Italy
Latvia
Liechtenstein
Lithuania
Luxembourg
Montenegro
Netherlands
Norway
Poland
Portugal
Romania
Russia
Serbia
Slovakia
Slovenia
Spain
Sweden
Switzerland
Turkey
Ukraine

America
Argentina
Brazil
Canada
Ecuador
Mexico
USA

DRIVE SYSTEMS

+61 (0) 3 9759 7100
@ info@drivesystems.com.au
drivesystems.com.au

Supply & Service of Mechanical Power Transmission Products

Headquarters:
SIKO GmbH
Weihermattenweg 2
D-79256 Buchenbach

Phon
+49 7661 394-0
Fax
+49 7661 394-388
E-Mail
info@siko.de

Subsidiaries:
SIKO Products Inc

SIKO Italia S.r.l.

SIKO Magline AG

SIKO International Trading (Shanghai) CO., Ltd.

SIKO Products Asia Pte. Ltd.

www.siko-global.com

Stay up to date! Follow us at „SIKO-global“

Subject to technical alterations 10/2015 – Nr. 84815