TOOLS	
TOOL NAME	N°
.	.

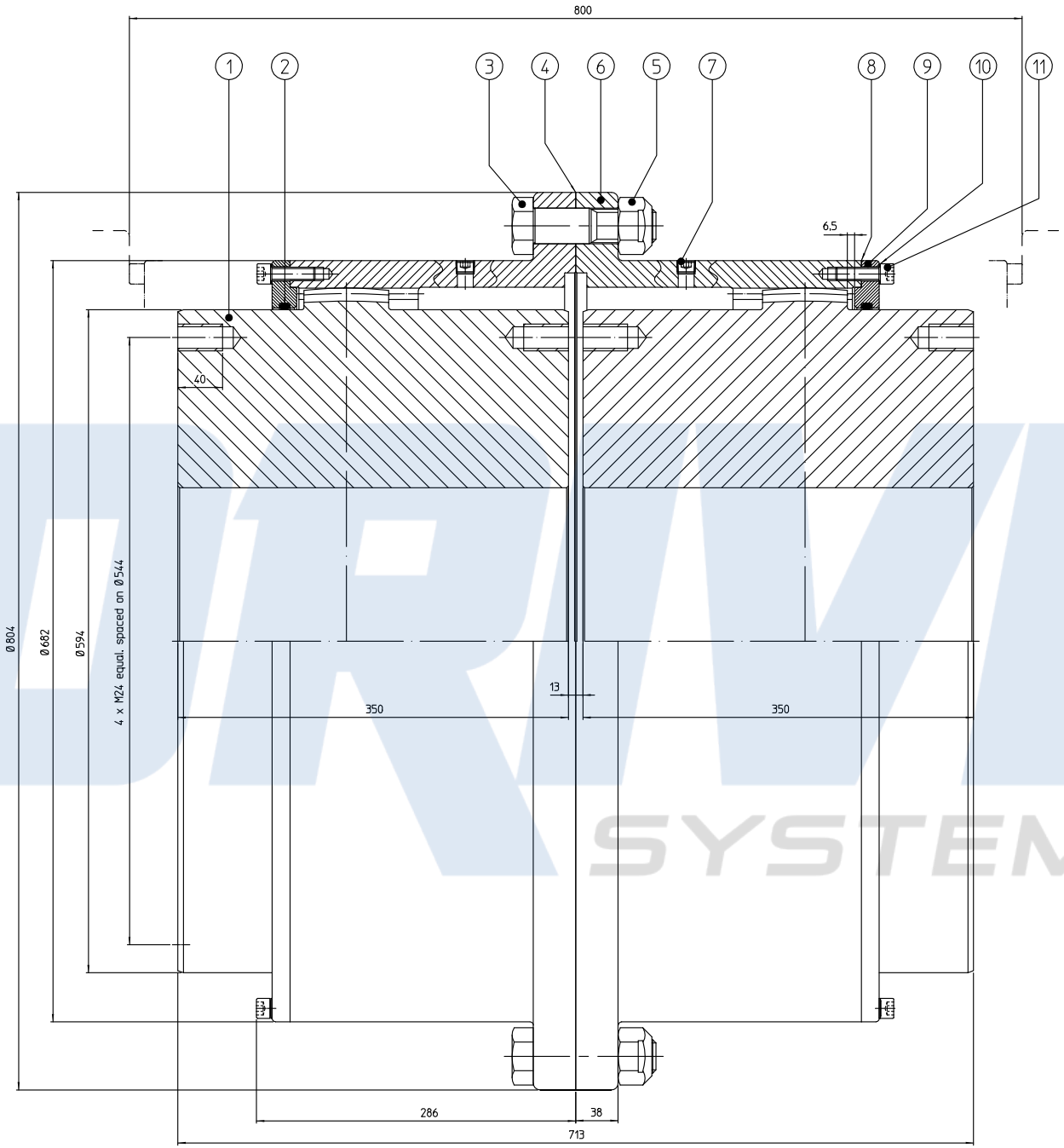

Drive Systems Pty Ltd

+61 (0) 3 9796 4800

info@drivesystems.com.au

8/32 Melverton Drive, Hallam, Victoria 3803 Australia

drivesystems.com.au

ABN: 83 836 394 598

Appl. nominal torque : ..... Nm
Appl. peak torque : ..... Nm
Appl. nominal speed : .... rpm
Appl. maximum speed : .... rpm
Nominal gear torque : 560000 Nm
Peak gear torque : 1120000 Nm
Maximum angular misalignment : 2 x 0,75 degree
Weight : 1532 kg
'J' : 105 kg m2
For assembly, operation and maintenance see IM/A400.

	Item	Qty	Designation	Material	Drawing Nr	Code Nr
	11	48	Socket head cap screw	St.12.9		102912.012040.124
	10	48	Washer	Spring steel		108010.000120.000
	9	2	End cap	St.52.3	7840450-008	
	8	2	Gasket	Paper 4/10	7840450-009	111001.045003.000
	7	4	Plug	St.5.8		104906.706000.050
	6	2	Sleeve	7840450-076	7840450-012	
B	5	30	Self-locking nut	St.10		107980.030000.101
	4	1	Gasket	Paper 4/10	7840450-006	111001.045004.000
B	3	30	Fit bolt	St.12.9		101011.030110.124
	2	2	O-ring	Buna		111100.020472.000
	1	2	Hub flex	Ck - 45	7840450-002	.

REV.	ZONE	REVISION	DATE	NAME
B		Qté 30 était 28 rep. 3 et rep. 5	6-10-97	D.P.F.
A		Changed code-numbers and added dim.	18-08-95	H. B.

Roughness: Symbol | Ra µ inch | Ra µ m

Inertia (J) : . kg.m2 | Weight : . kg | File Nr .

Scale 1 / 2

0 1 2 3 4cm

Tolerances : Unless otherwise specified
Linear : ± 0,1mm
Angular : ± 0°30'

Drawn	H. L.	
Date	27-06-89	
Meh. Concept.	PB	
Approved	DPF	

This design is the exclusive property of N.V. ESCO TRANSMISSIONS S.A. - DEGEM It is for internal use only and is not to be reproduced or to be transmitted to others without written consent.

n.v. ESCO TRANSMISSIONS s.a.
Culliganlaan, 3
1831 DIEGEM - BELGIUM
Tel: 02 7204189 Fax: 02 7210127

ESCOGEAR FST 450 N -EM

Assembly

Format	A 1
Drawing Nr	Rev.
7840450-000	B